Giada

Shenzhen JIEHE Technology Development Co., Ltd.

Giada

www.giadatech.com

EN-J6412DL User Manual

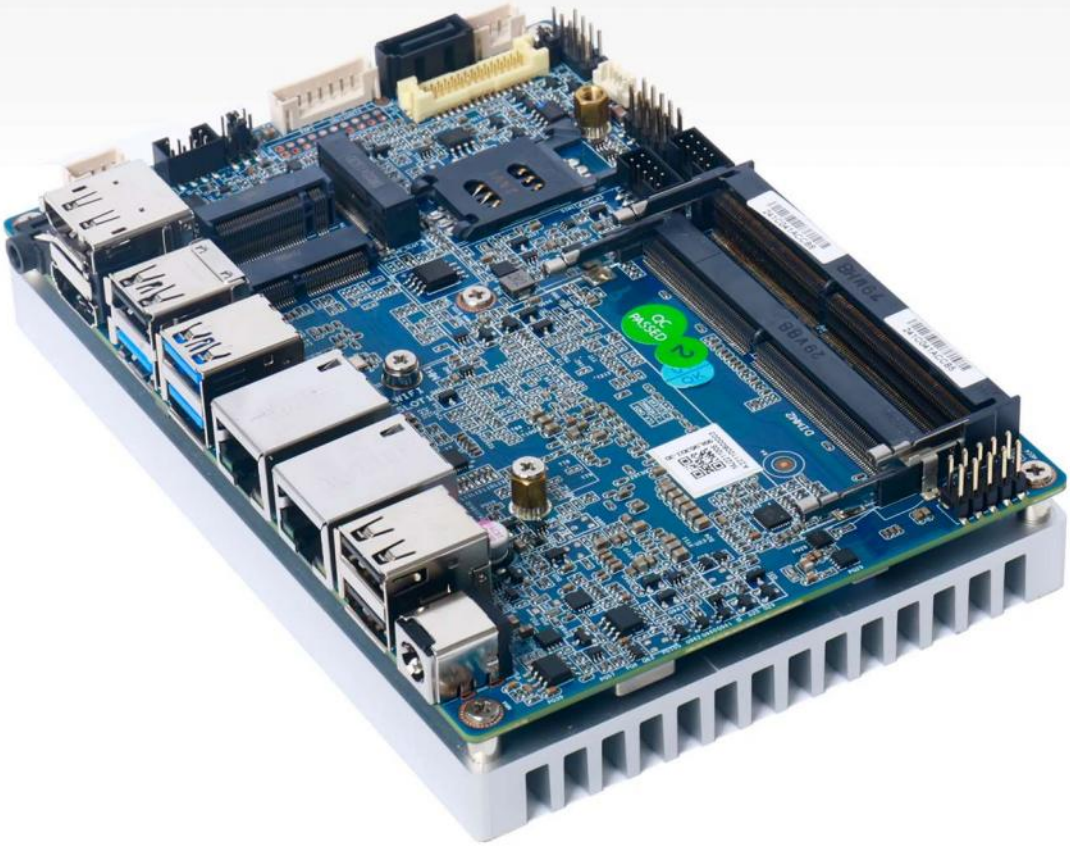

Statement

Safety Notice

• Read the user manual carefully before setting up the Giada product.
• Disconnect the power cord before installing the internal components
• Most electronic components are sensitive to static electrical charge, please wear a wrist-grounding strap when installing the internal components.
• Don't disconnect the power cord when the system is running to avoid damage to the sensitive components by instantaneous surge voltage.

Contact Information

Shenzhen JIEHE Technology Development Co., Ltd.
Website: www.giadatech.com
Phone: +86-755-3330 0336
Email: support@giadatech.com
Address: 1~3/F, Block A, Tsinghua Information Harbor, North Section, Shenzhen Hi-tech Park, Nanshan District, Shenzhen, China

Table of Contents

1. Product Introduction

1.1 Brief Introduction

Giada EN-J6412DL adopts Intel® Elkhart Lake platform Celeron® J6412 quad-core CPU with a main frequency up to 2.60 GHz. With a size of only 3.5 inches, the life cycle of up to 7 years, and rich interfaces, it is an excellent choice for Kiosk and digital signage.

1.2 Motherboard Picture

1.3 Specification

Processor	**CPU**	Intel® Celeron J6412 processor
	Frequency	2.00GHz (Up to 2.60GHz)
	BIOS	AMI Source Code
	Chipset	SOC
Memory	**Type**	2×SO-DIMM DDR4-3200MHz up to 32GB
Graphics	**GPU**	Intel® UHD Graphics for 10th Gen. CPU
	Graphic Engine	DirectX, OpenGL, OpenCL
Audio	**Controller**	Realtek ALC897 HD Audio
Network	**Controller**	2×RTL8111H Gigabit Ethernet
Storage	**SATA**	1×2.5” SATA3
	M.2	1×M-Key M.2(2280) for PCIe SSD

	eMMC	Onboard eMMC5.1 optional
External I/O Interface	**USB**	3×USB 3.2 Gen2, 3×USB 2.0
	Network	2×RJ45
	Audio	1×2-in-1 headset (Audio-out&Mic-in)
	Display Output	1×HDMI (Max.4096×2160@60Hz)
		1×DP (Max.4096×2160@60Hz)
Internal I/O Interface	**LVDS**	1×30pin LVDS (Colay with eDP header)
	eDP	1×40pin eDP(Colay with LVDS header)
	USB	2×USB2.0, signal by 1×9pin USB header
	RS232	1×RS232, signal by 1×9pin COM header
	RS232/422/485	1×RS232/422/485, signal by 1×9pin COM hearder
	F_Panel/Speaker	1×8pin F_Panel, 1×4pin Speaker
	CLR_CMOS	1×3pin Clear CMOS
	GPIO	1×10pin GPIO
	SYS_FAN	1×4pin system fan, 1×6pin Inverter
	TPM2.0	1×TPM optional
WatchDog Timer	**WatchDog Timer**	Yes
Auto Power On	**Auto Power On**	Yes
RTC	**Remote Time control**	Set up independently every day, a week as a cycle
PWR	**Power requirement**	DC-IN 12V – 24V
Operation System	**Windows/Linux**	Windows10/11(64 bit) / Linux(64 bit)
Fan	**Fan**	Yes
PCB	**Dimensions(W×D)**	146mm×102mm (5.75”×4.02”)
Environment	**Operating Temperature**	0°C ~ 60°C (32 ~ 140°F) at 0.7 m/s air flow
	Relative Humidity	95% @60°C (non-condensing)

2. Hardware Usage Instruction

2.1 Dimension Chart

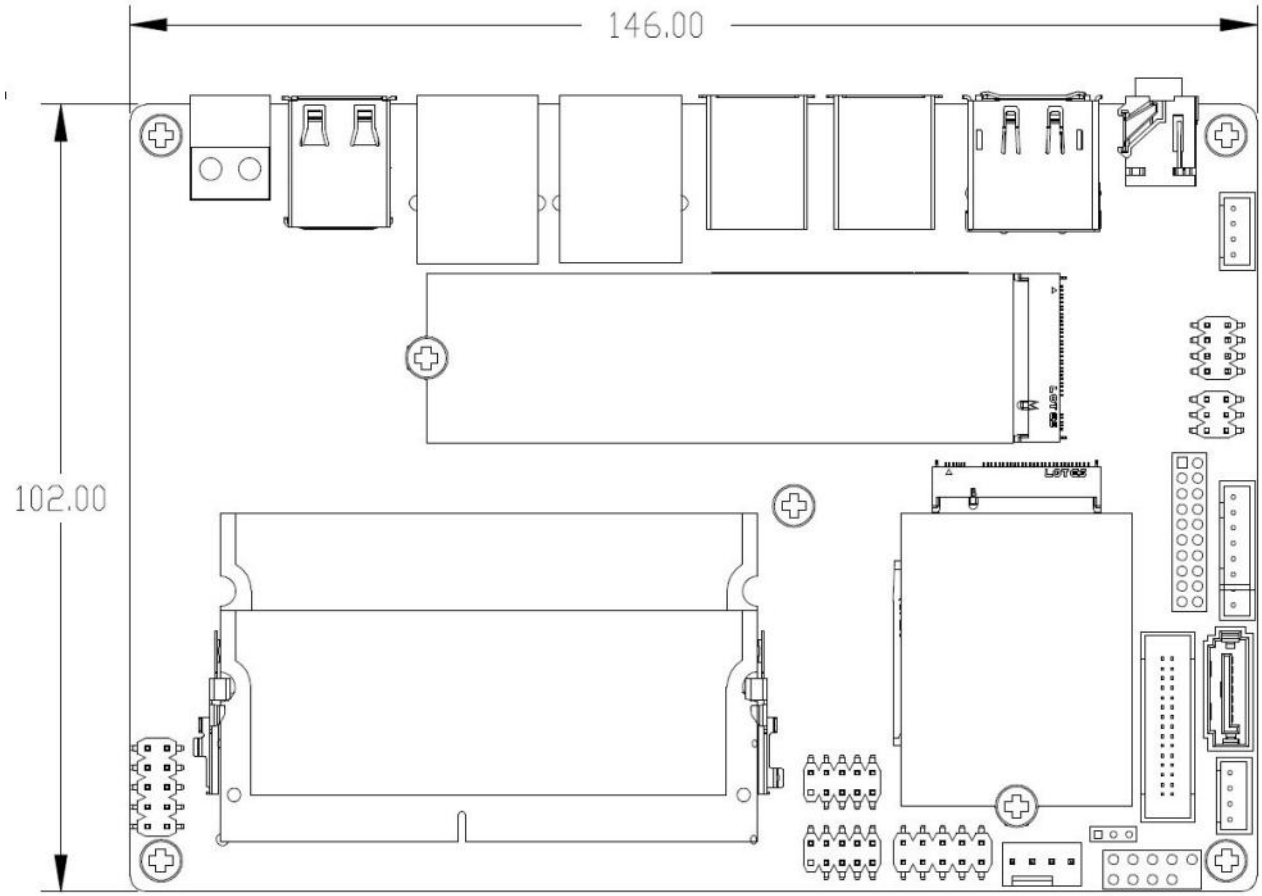

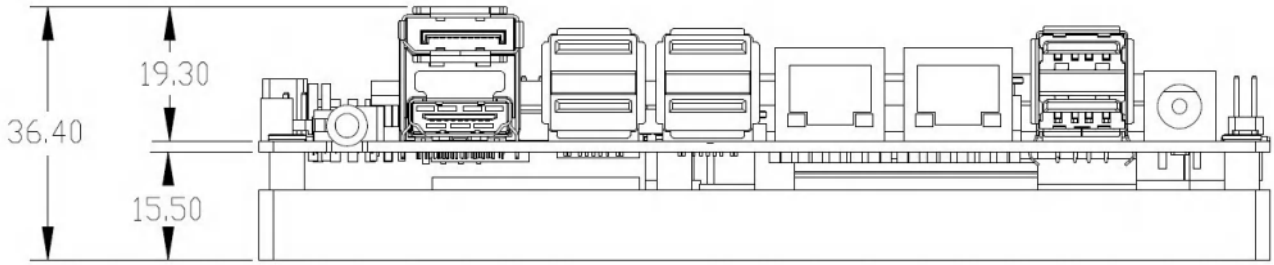

2.2 Interface Definition

2.2.1 Board Jumper, Header And Interface Diagram

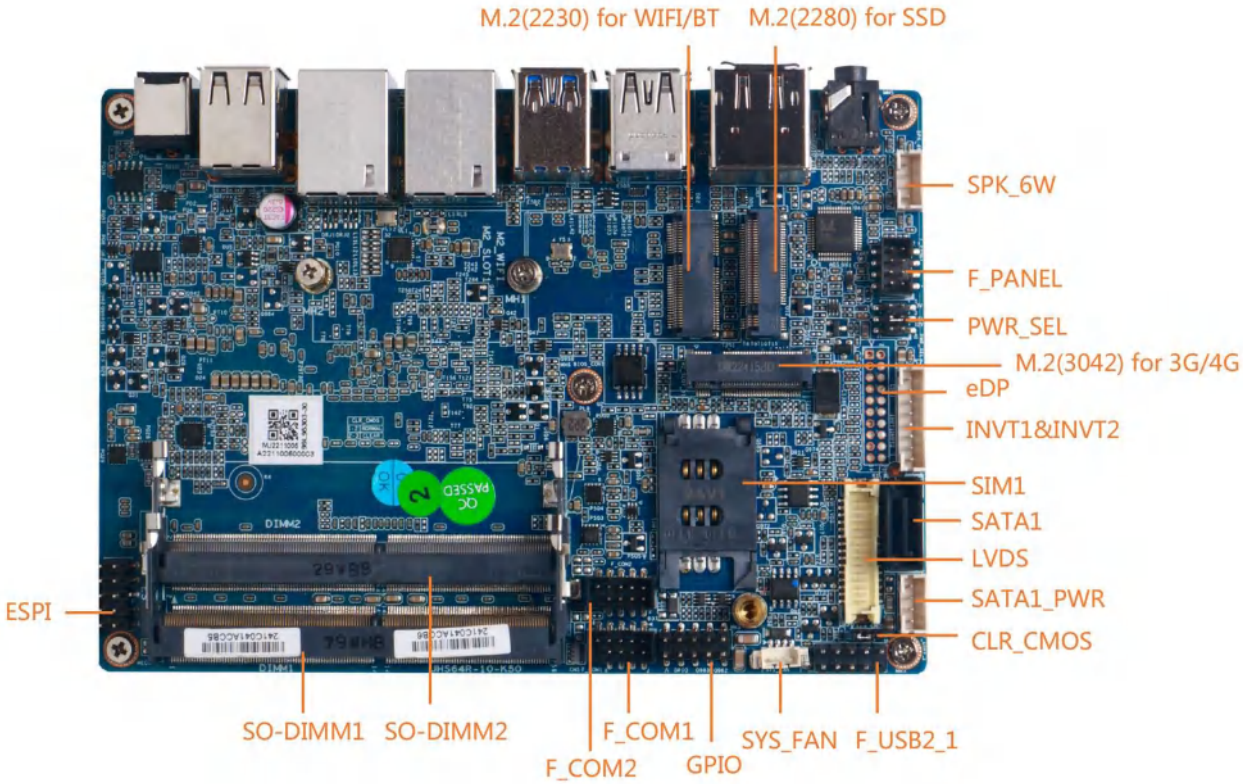

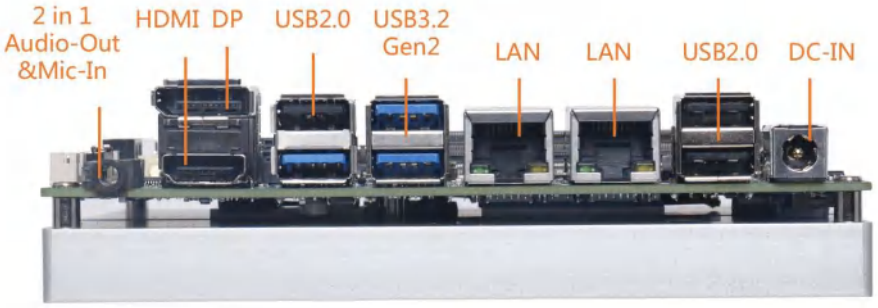

2.2.2 Board Jumper And Header Definition

No.	Name	Function	PIN Definition
1	F_COM1	COM Port (RS232)	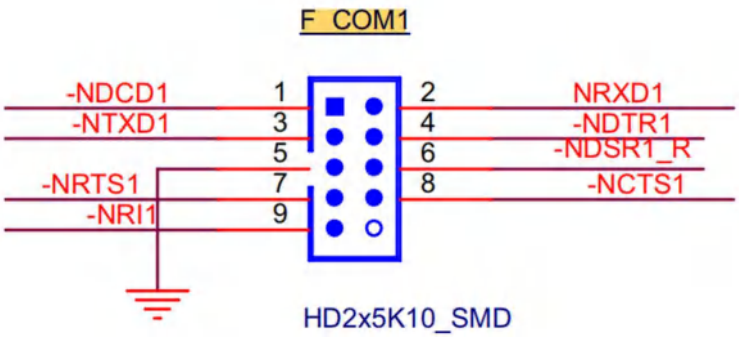
2	F_COM2	COM Port （RS232/ 422/485）	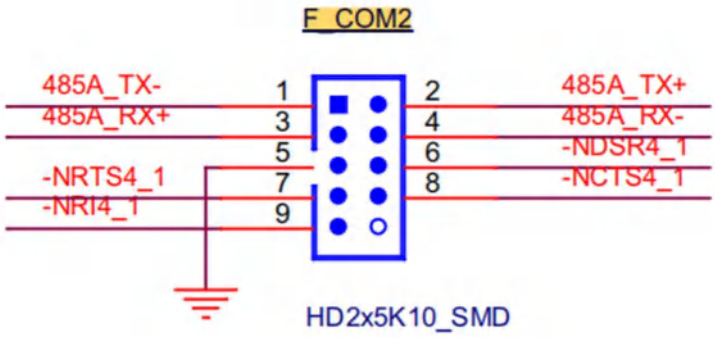
3	GPIO	GPIO Port	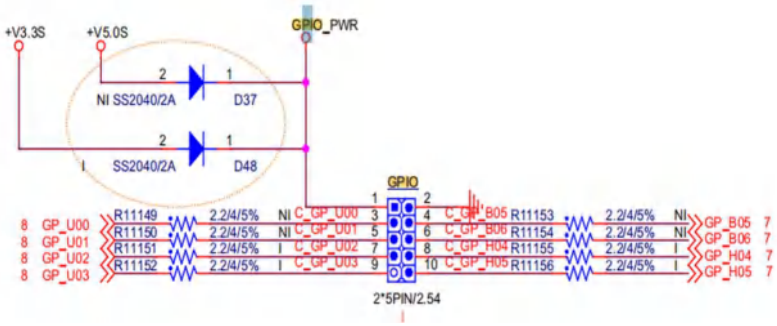
4	SYS_FAN	System Fan	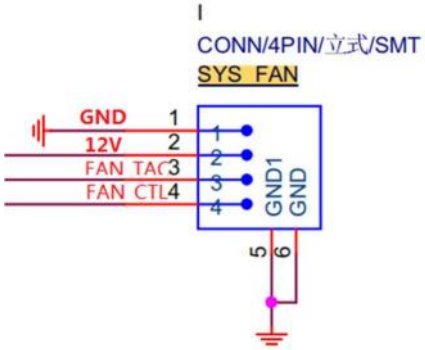

5	CLR_CMOS	Clear CMOS Jumper	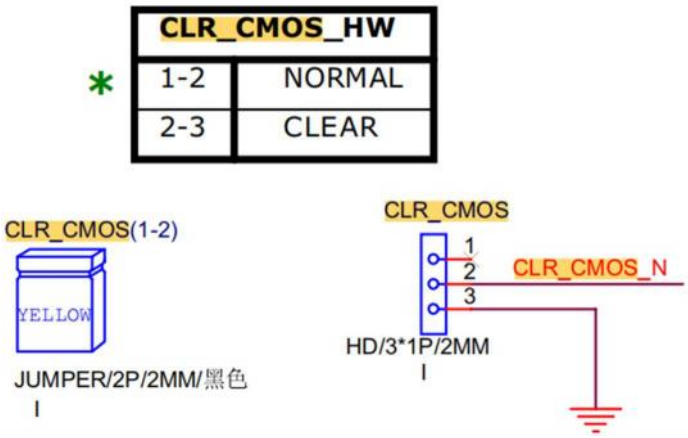
6	F_USB2_1	USB2.0 Header	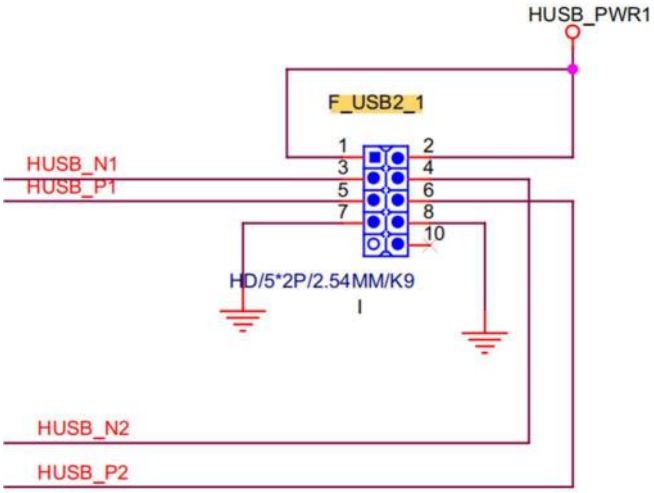
7	SPK_6W	Speaker Port	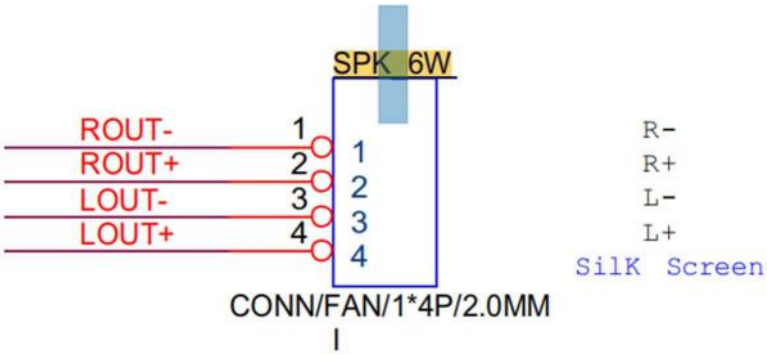

8	F_PANEL	Front Panel	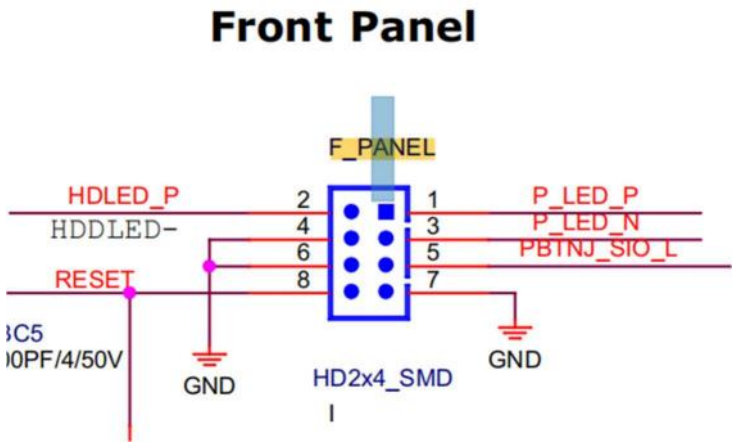
9	PWR_SEL	LVDS/EDP Power Select	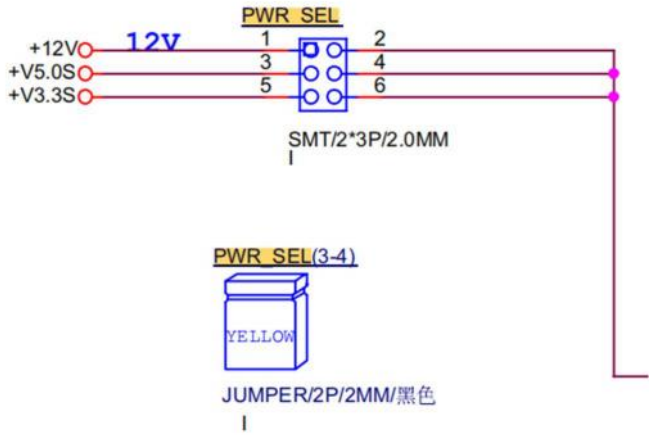
10	EDP1	EDP Signal Port	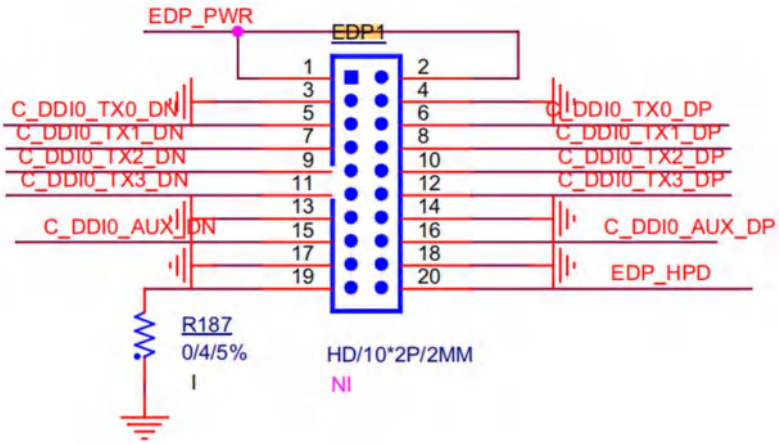

11	INVT1	INVETER Backlight Pin	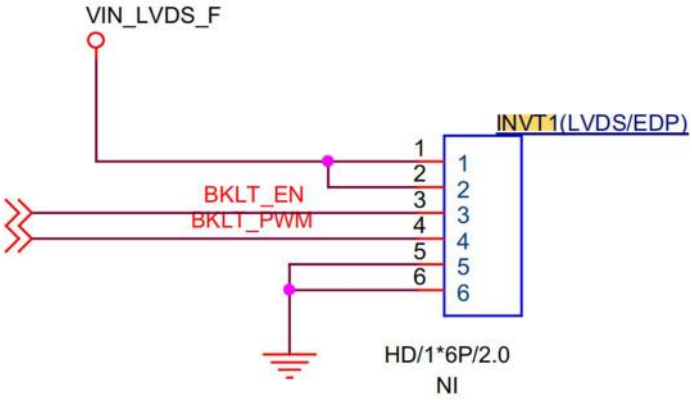
12	INVT2	INVETER Backlight Pin	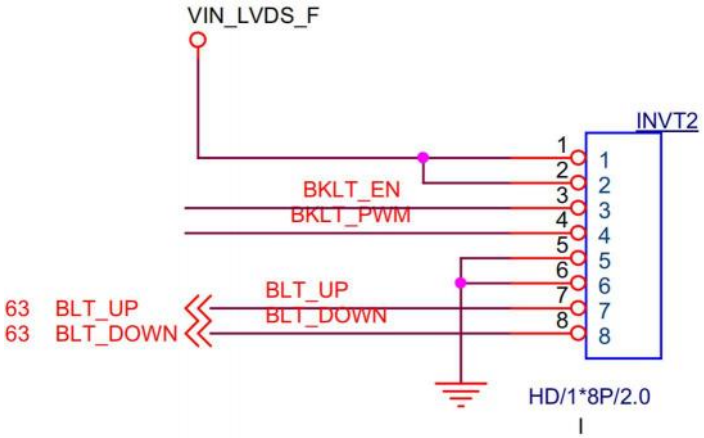
13	LVDS	LVDS Pin	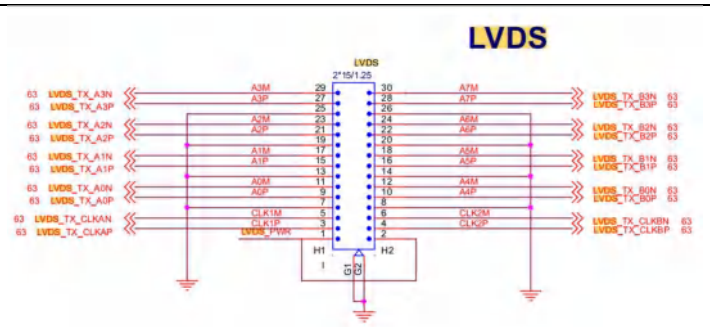
14	SATA1	SATA3.0	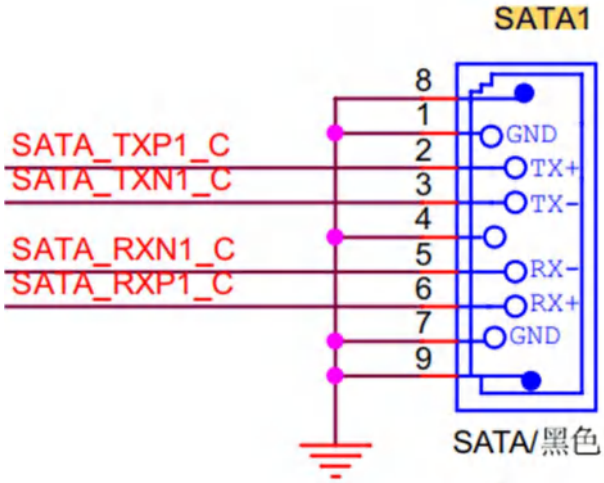

15	SATA1_ PWR	SATA1 Power Supply	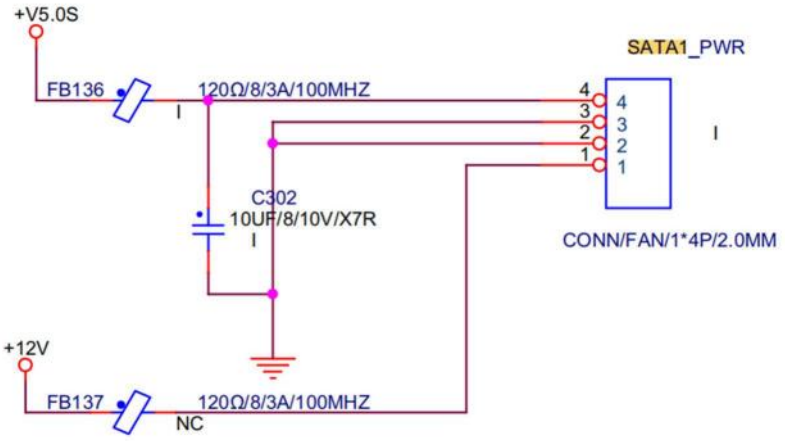

3. Accessories Installation Steps

⚠ For safety reasons, please ensure that the board is disconnected with power before installation.

3.1 WIFI/3G/4G (M.2) Installation

- **WIFI Installation**

1. Tighten the WIFI module and WIFI module bracket with screws.
2. Plug the WIFI module into the M.2 slot.
3. Secure the module to the carrier by tightening up the screw.
4. Connect the black cable to **Main** and grey cable to **AUX**. Install the antenna.

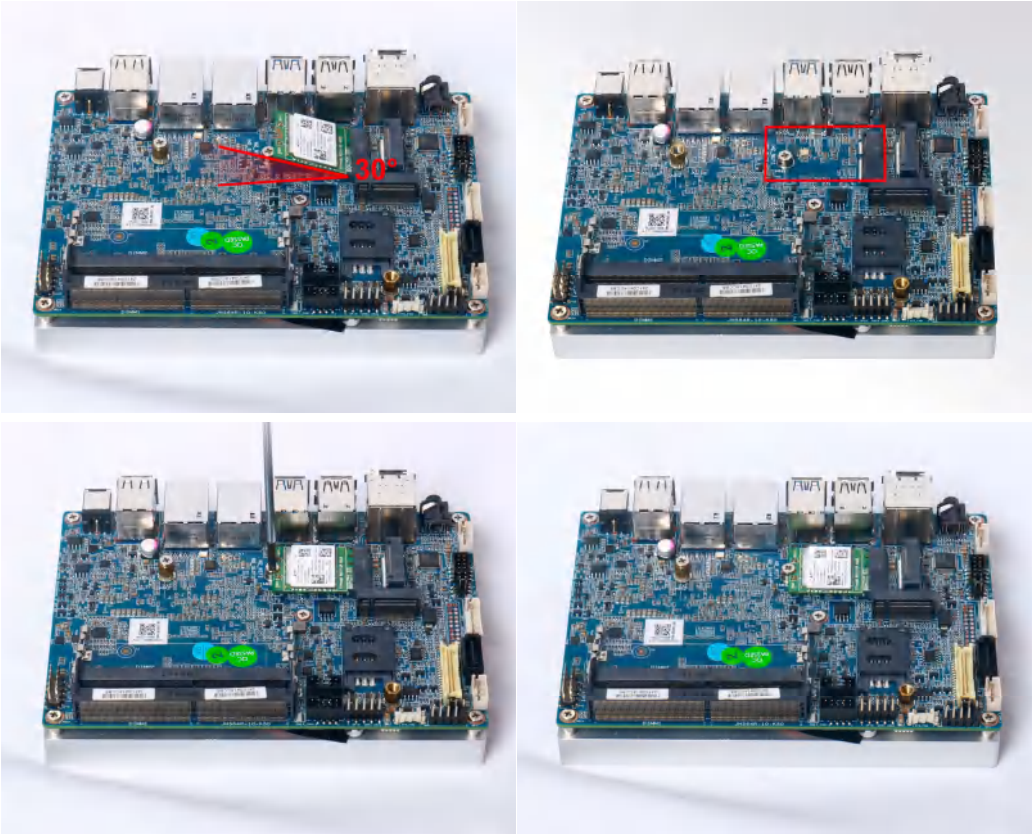

- **3G/4G Installation**

1. Plug the 3G/4G module into the M.2 slot.
2. Secure the module to the carrier by tightening up the screw.
3. Connect the cable to **Main** and install the antenna.

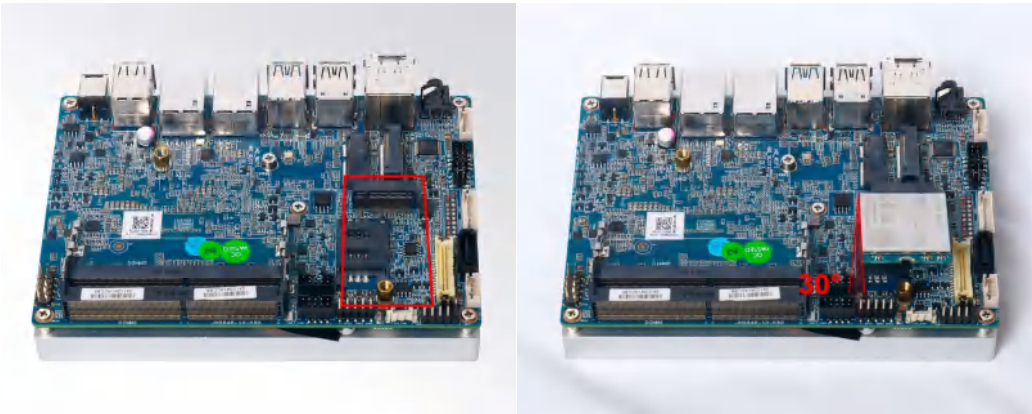

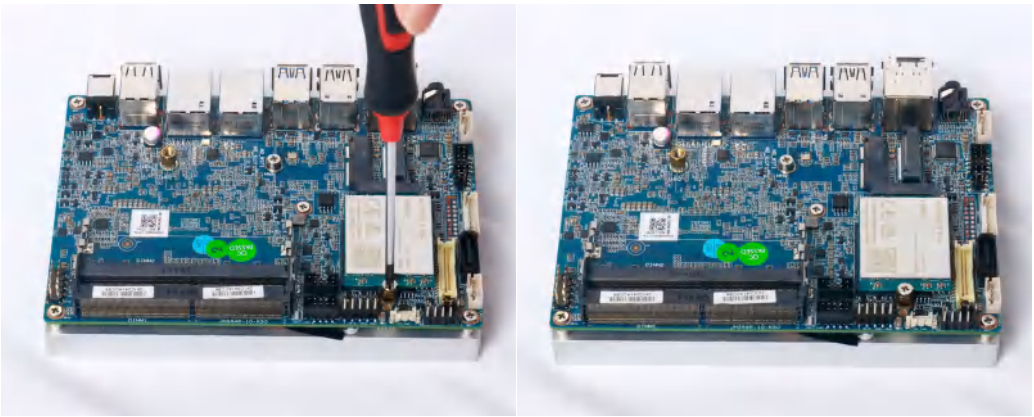

3.2 M.2 Installation

1. Plug the M.2 PCIe SSD into the M.2 slot.
2. Secure the module to the carrier by tightening up the screw.

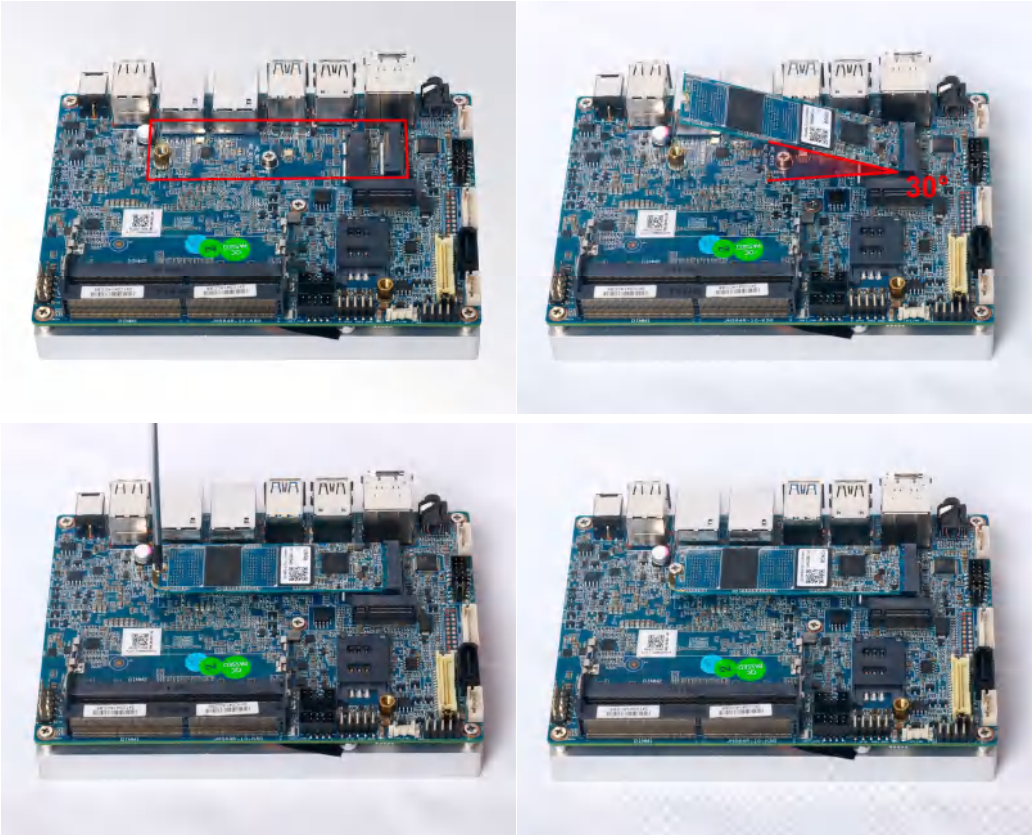

3.3 SATA Installation

⚠ Connect SATA with cable to the connector on board.

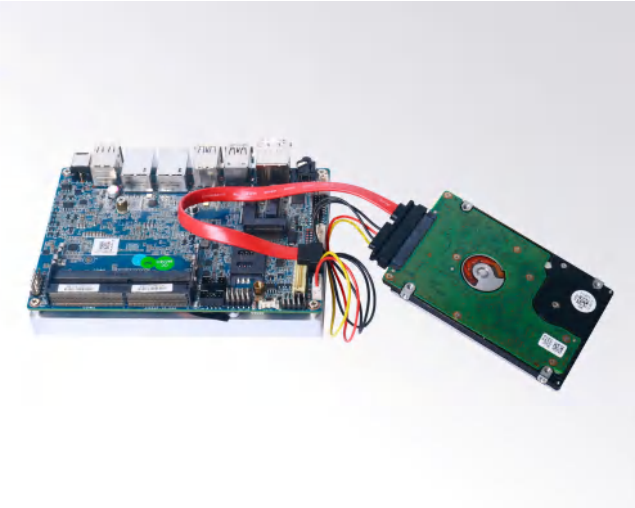

3.4 Memory Installation

This product only supports DDR4 SO-DIMM memory modules.

1. Locate the SO-DIMM slot on the board.
2. Gently insert the module into the slot in a 45-degree angle.
3. Carefully push down the memory module until it snaps into the locking mechanism.

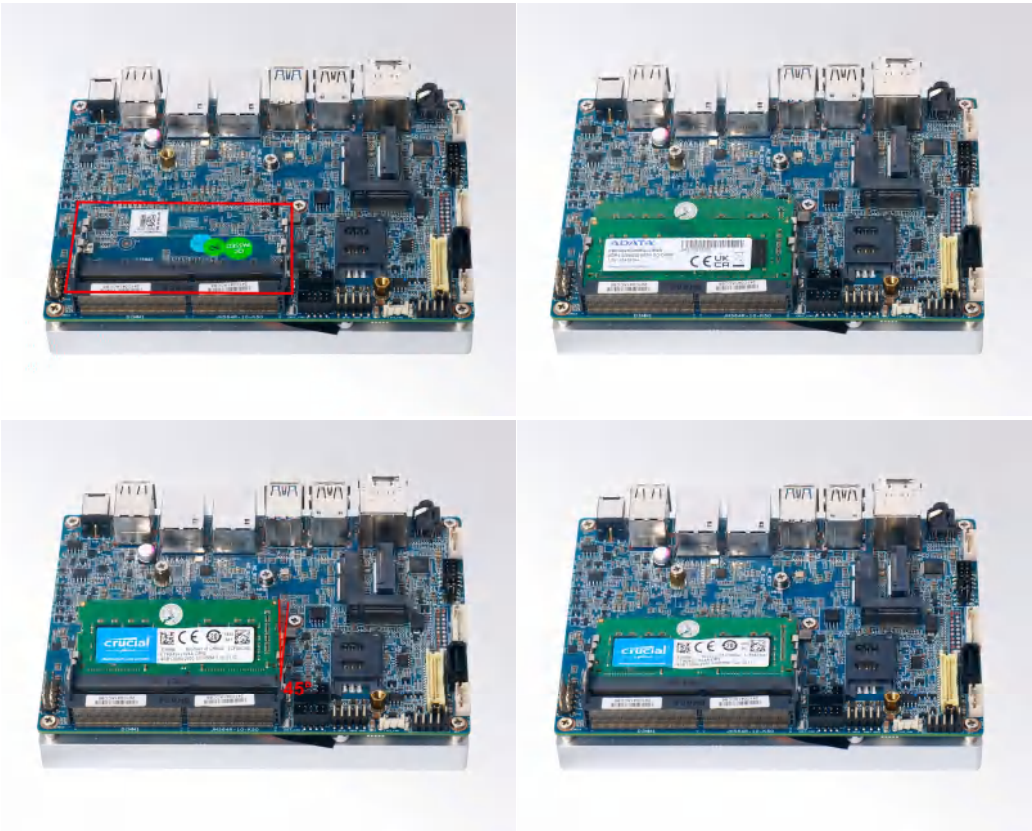

3.5 SIM Card Installation

⚠ This product supports standard SIM card with the size of 25mm × 15mm.

1. [Open] the SIM card holder and pull it up.
2. Insert the SIM card.
3. [Lock] the card holder.

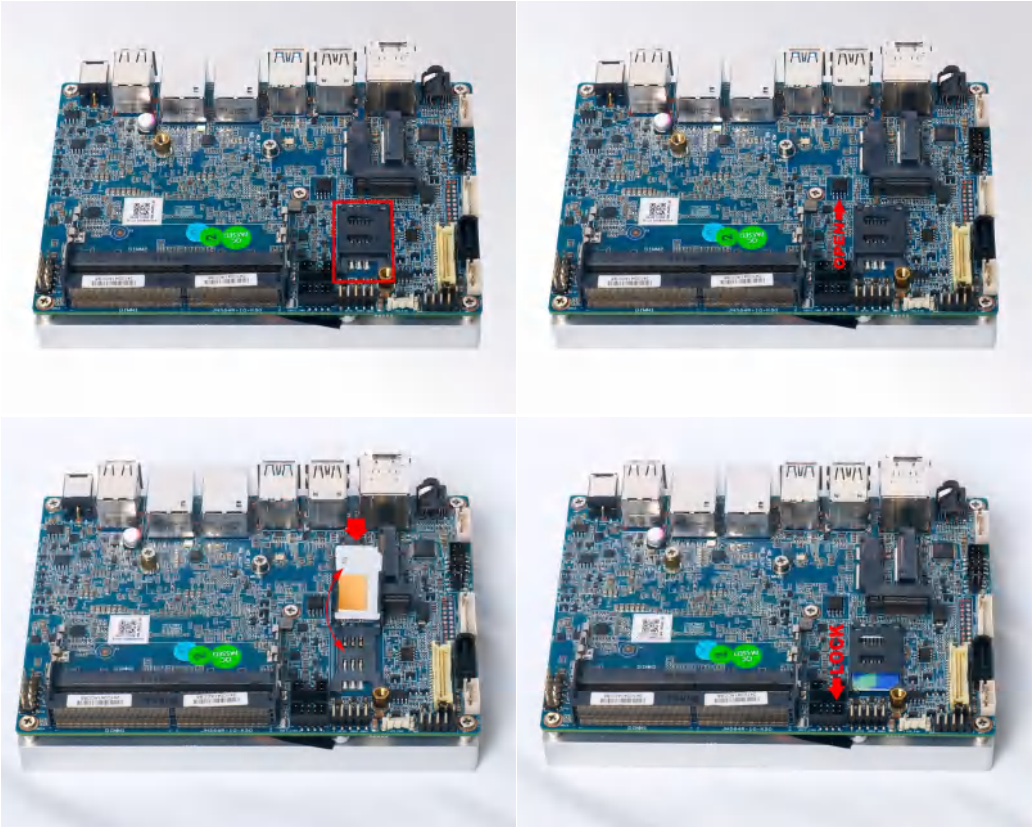

4. Bios Setup

Notice:

The descriptions relating to BIOS setup in this Manual is for reference only since the BIOS version of the product might be upgraded. Giada provides no guarantee that all the contents in this Manual are consistent with the information you acquired.

BIOS is a basic I/O control program saved in the Flash Memory. Bridging the motherboard and the operation system, BIOS is used for managing the setup of the related parameters between them.

When the computer is activated, the system is first controlled by the BIOS program. Firstly, a self-detection called POST is performed to check all hard devices and confirm the parameters of the synchronous hardware.

Once all detections are completed, BIOS will hand over the controlling to the operation system (OS). As BIOS serves as the only channel that connects the hardware and software, whether your computer can run stably and work in optimized state will hinge on how to properly set the parameters in BIOS. Therefore, the correct setup of BIOS plays a key role in stably running the system and optimizing its performance.

The CMOS Setup will save the set parameters in the built-in CMOS SRAM on the motherboard. When the power is shut off, the lithium battery on the motherboard will provide continuously power to CMOS SRAM.

The BIOS setup program will allow you to configure the following items:

1. HD drive and peripheral devices
2. Video display type and display items
3. Password protection
4. Power management characteristics

A. State of BIOS Setup

When the computer is started up, BIOS will run the self-detection (Post) program. This program includes series of diagnosis fixed in BIOS. When this program is executed, the following information will appear if any error is found:

Press [F1] to Run General help

Press [F2] to Load previous values and continue

To enter BIOS, you can press DEL to load the default values and enter the system, you can press DEL to enter the BIOS interface if no error is found. If the indicative information disappears before you operate, you can shut off the computer and turn it on again, or you can press the RESET key on the product case. To restart your computer, you can also simultaneously press < Ctrl > + < Alt > + < Delete >.

B. Function Keys definitions

Hot Key	Description
↑	(Up key) Move to the previous item
↓	(Down key) Move to the next item
←	(Left key) Move to the left item
→	(Right key) Move to the right item
ESC	Exit the current interface
Page Up	Change the setup state, or add the values
Page Down	Change the setup state, or deduct the values
F1	Display the information of the current function Keys definitions.
F9	Load the optimized values
F10	Save the settings and exit the CMOS SETUP

C. Auxiliary information Main interface

When the system enters the main interface of Setup, the major selected contents will be displayed at the lower part of the interface with the change of the options.

When you set the value for each column, you can view the preset value of the column and the values that can be set if you press F2, for example, the BIOS default values or CMOS Setup values.
To exit the interface for auxiliary information, press [ESC].

1) Main menu
When the system enters the CMOS Setup menu, you can see the main menu on the upper part of the screen, as shown in Figure1.
In this main menu, you can use the left and right direction keys to select the setup items.
Once the item is selected, the lower part of the computer screen will show the details of setting.

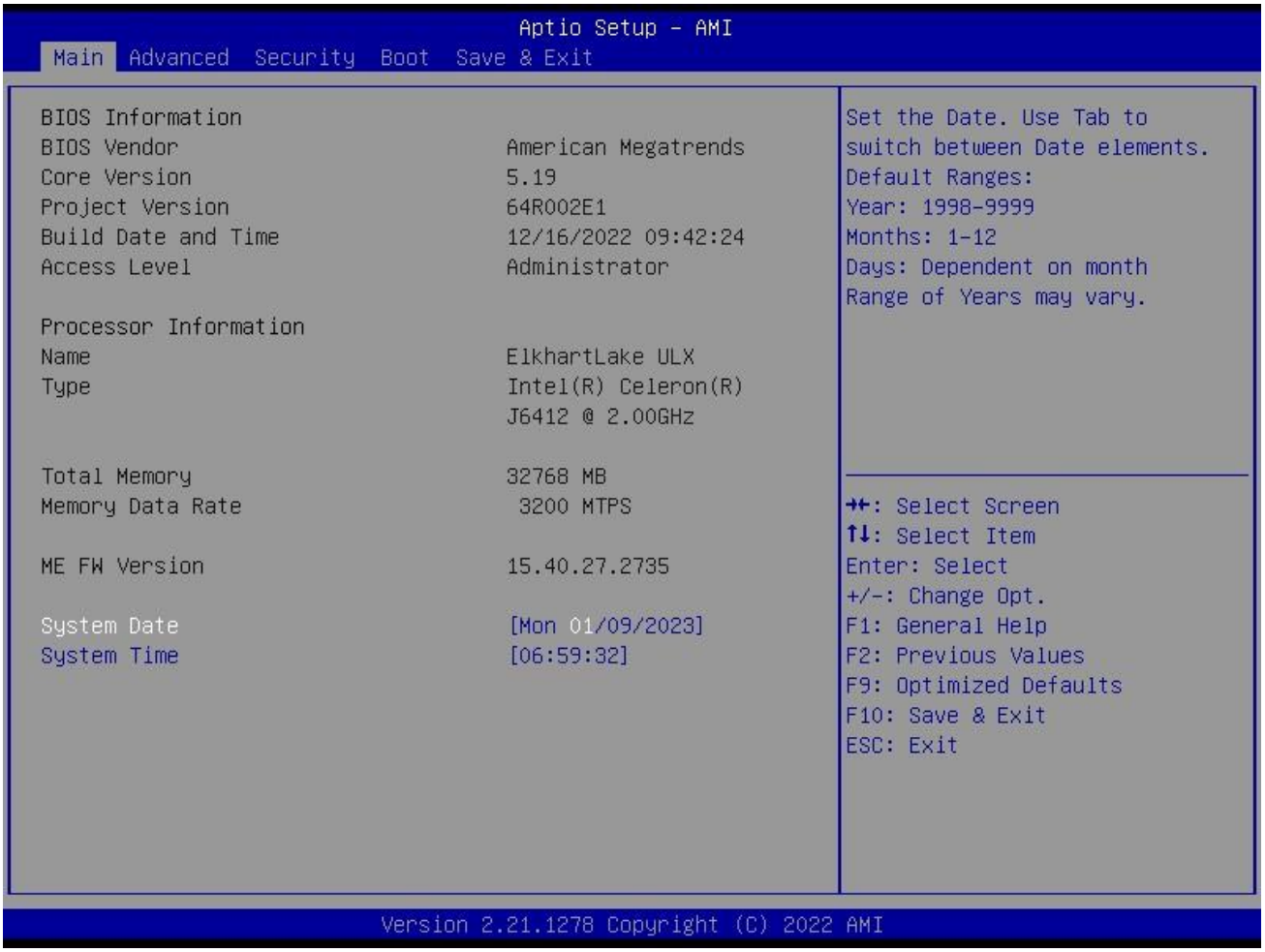

Fig 1

1) Main (standard CMOS setup)
This item is used for setting the date and time.

2) Advanced (advanced BIOS setup)
This item is used for setting the advanced functions provided by BIOS, such as specifications of PCIe facilities,CPU, HDD, etc.

3) Security (set the administrator/user password)

4) Boot (startup configuration characteristics)

5) Save & Exit (option of exit)
This item includes load optimal defaults / load failsafe defaults value / discard changes / discard changes and exit.

4.1 Main (Standard CMOS setting)

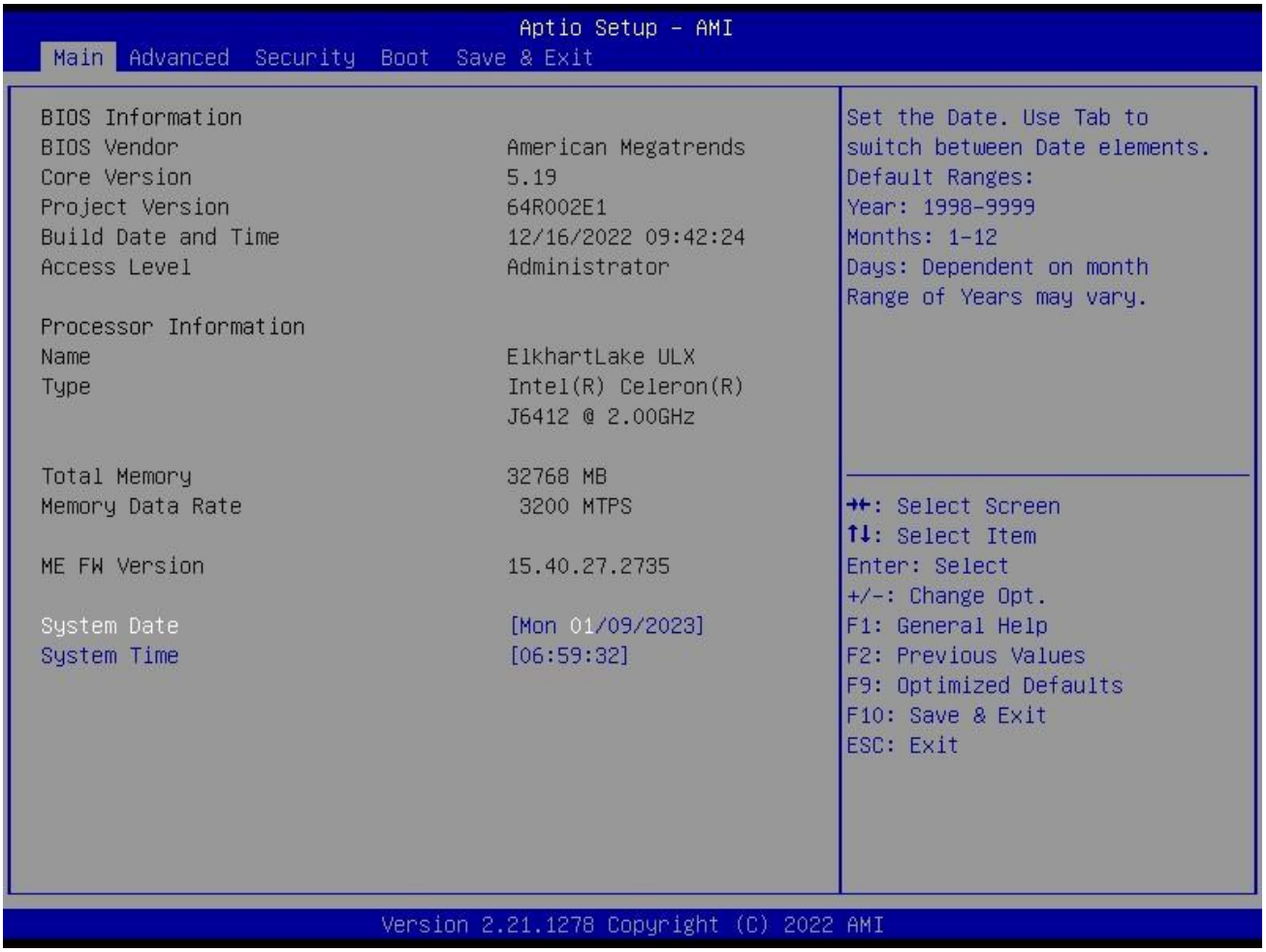

1) System time (hh:mm:ss)

Use this item to set the time for the computer, with the format as “HH / MM / SS”.

2) System date (mm:dd:yy)

Use this item to set the date for the computer, with the format as “week, MM / DD / YY”.

4.2 Advanced (Advanced BIOS setup)

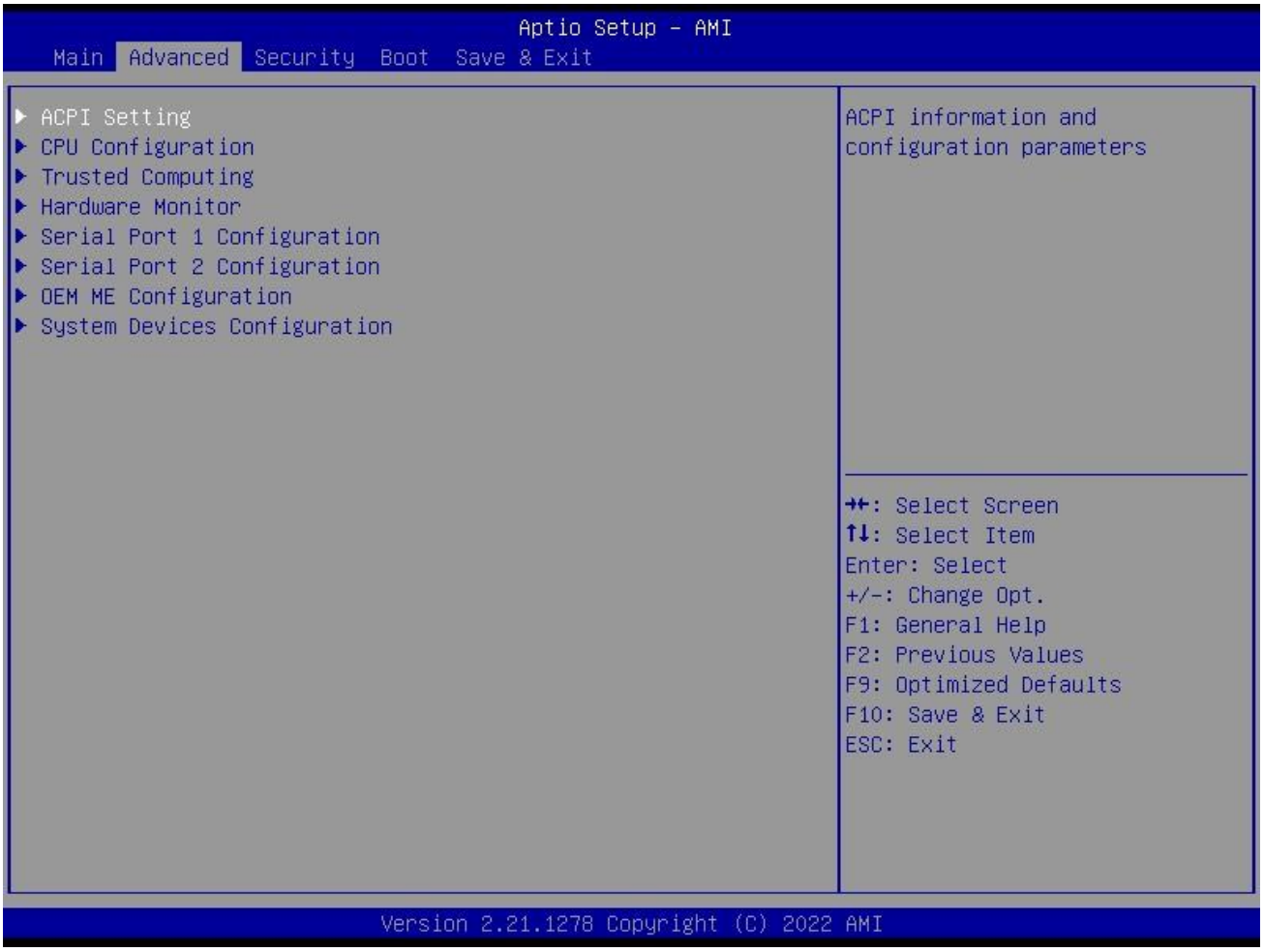

4.2.1 ACPI Setting

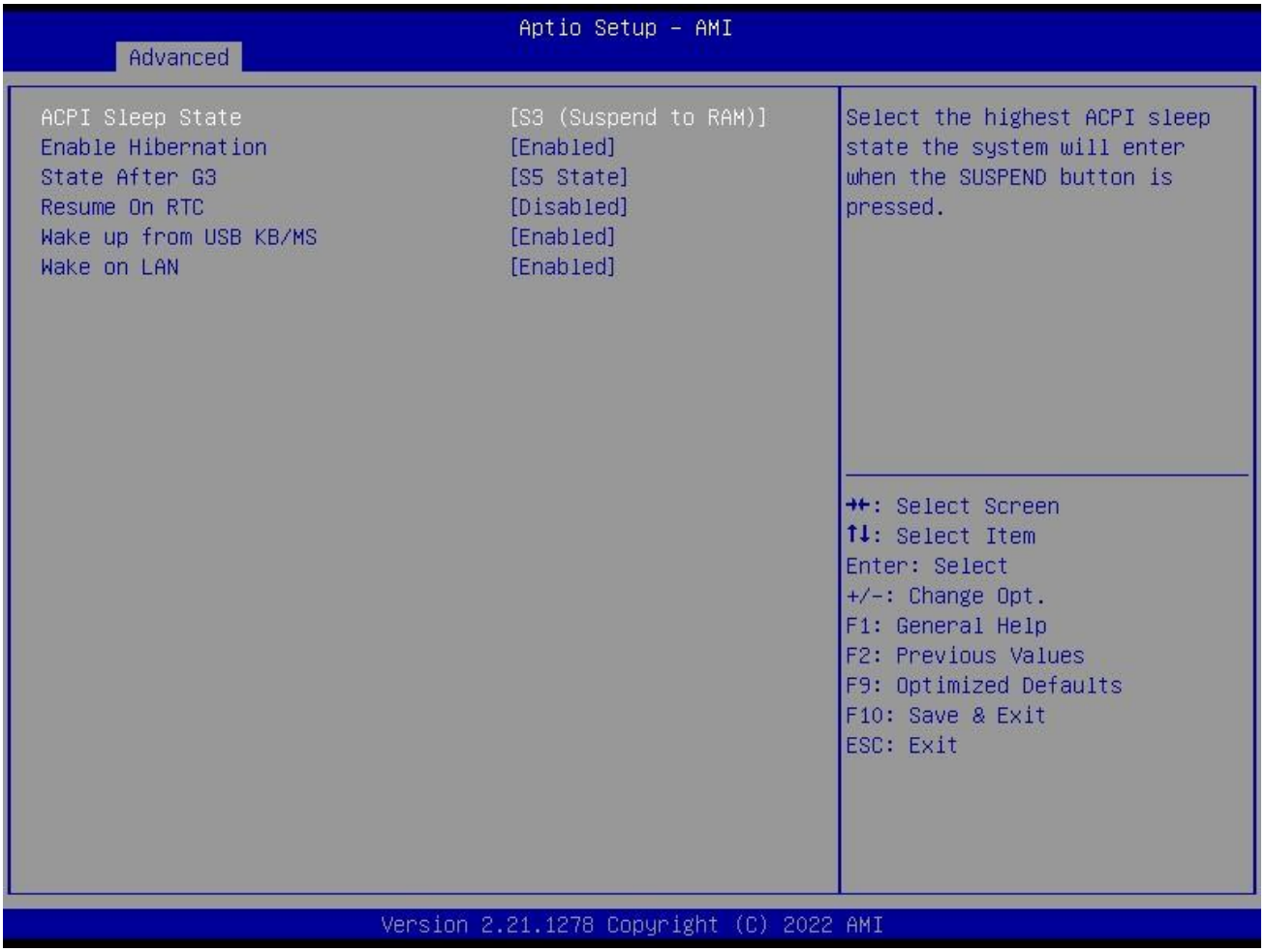

ACPI Setting Item	Description
ACPI Sleep State	● Select the highest ACPI sleep state the system will enter when the suspend button is pressed.
Enable Hibernation	● Enables or disables system ability to Hibernate (OS/S4 Sleep State).This option may not be effective with some OS.
State After G3	● Specify what state to go to when power is re-applied after a power failure (G3 State) .
Resume On RTC	The user can set up automatic startup by Fixed Time ● Enabled. ● Disabled. The RTC function is disabled by default.

Wake up from USB KB/MS	If this item is enabled, the user can wake up PC by USB and keyboard from S3 or S4 ● Disabled. ● Enabled. This item is enabled by default
Wake On LAN	Enable or Disable PCIE LAN to wake the system ● Disabled. ● Enabled. This item is enabled by default

4.2.2 CPU Configuration

CPU Configuration Item	Description
CPU Configuration	
Boot performance mode	● Max Battery ● Max Non-Turbo Performance. ● Turbo Performance.
Intel (VMX) Virtualization Technology	Intel Virtualization Technology is enabled by default. User can enable and disable the Intel Virtualization Technology function.
Intel（R） SpeedStep（tm）	Intel（R） SpeedStep Technology dynamically increases the processor's frequency as needed by taking advantage of thermal and power headroom to give you a burst of speed when you need it, or increased energy efficiency.The option is enabled by default. You can disable the function if it’s necessary.
Race To Halt（RTH）	The Race To Halt（RTH） function is enable by default. It can adjust the CPU base frequency work in C-state. Optional: C-state.
Intel（R）Speed Shift Technology	Intel speed shift function is enabled by default. Intel® Speed Shift Technology uses hardware-controlled P-states to deliver dramatically quicker responsiveness with single-threaded, transient (short duration) workloads, such as web browsing, by allowing the processor to more quickly select its best operating frequency and voltage for optimal performance and power efficiency.
C states	The C-State function is disabled by default.
Turbo Mode	● Disabled. ● Enabled.

4.2.3 Trusted Computing

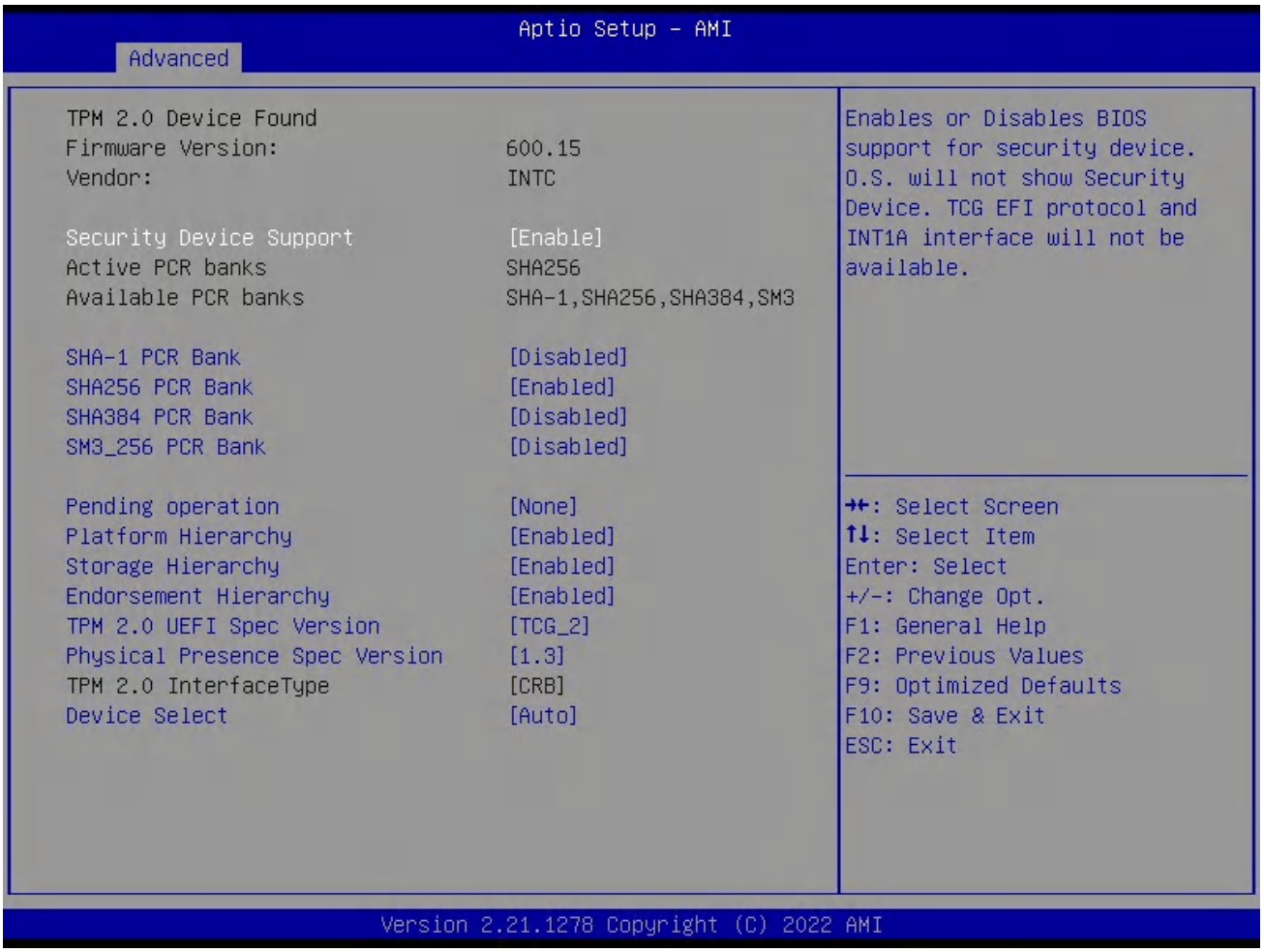

TPM20 Device Found	Description
Firmware Version	● TPM FW version is 600.15
Vendor	● The vendor is INTC.It means the FTPM is enabled by default.
Security Device Support	● Disabled ● Enabled. This item is enabled by default.
CHA-1 PCR Bank	● Disabled. This item is disabled by default. ● Enabled.
SHA256 PCR Bank	● Disabled. This item is Enabled by default ● Enabled.
SHA384 PCR Bank	● Disabled This item is Disabled by default. ● Enabled.

SM3_256 PCR Bank	● Disabled This item is Disabled by default. ● Enabled.
Pending operation	● It includes None and TPM Clear function.
Platform Hierarchy	● Disable or Enable the Platform Hierarchy.
Storage Hierarchy	● Disable or Enable the Storage Hierarchy.
Endorsement Hierarchy	● Disable or Enable the Endorsement Hierarchy.
Physical Presence Spec Version	● You can choose 1.2 or 1.3. The version is 1.3 by default.
TPM 20 Interface Type	● TPM2.0 Interface Type is CRB by default.
Device Select	● You can select TPM1.2 or TPM2.0 or Auto. Auto is set up by default.

4.2.4 Hardware Monitor

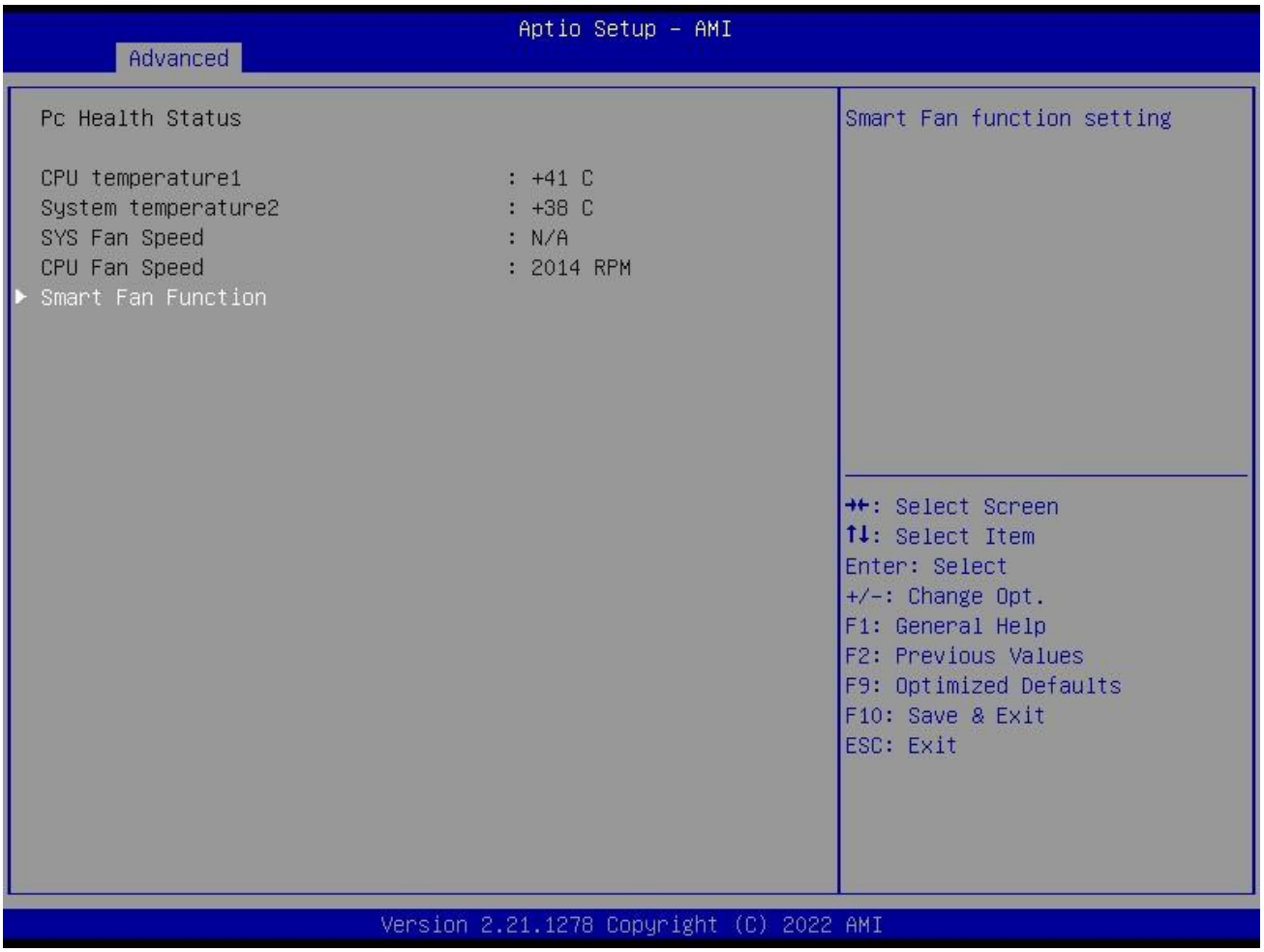

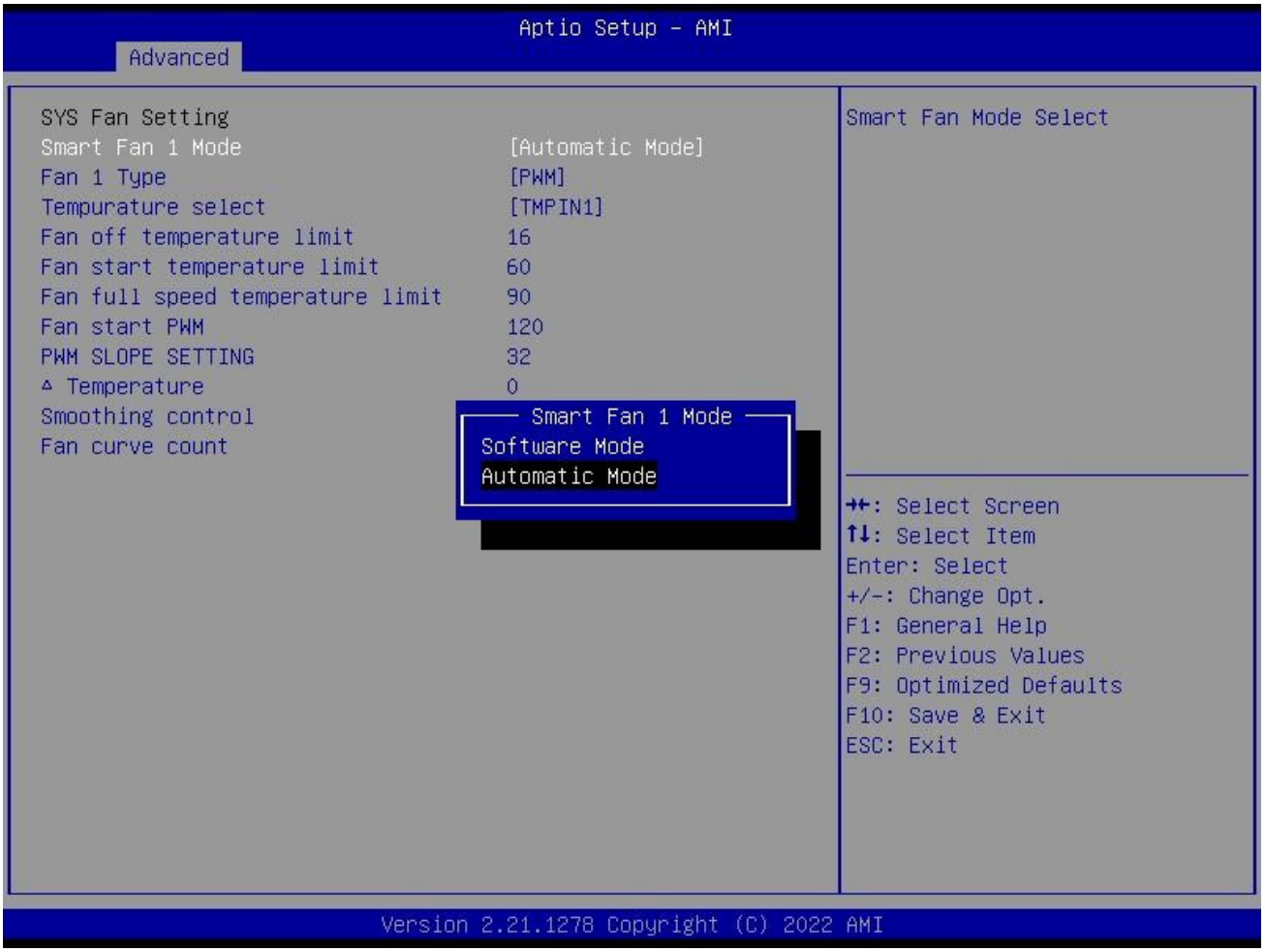

System Devices Configuration	Description
Smart Fan Function	
Smart Fan1 Mode	It includes "Software Mode" and "Automatic Mode". ● Software Mode. ● Automatic Mode: Automatic Mode is enabled by default.
Fan off temperature limit	● FAN will stop work If temperature is lower than the Fan off temperature limit value.
Fan start temperature limit	● If the temperature is higher than fan off temperature limit, FAN will start work.
Fan Full Speed Temp limit	● If the temperature is higher than the FAN Full Speed temp limit value, the FAN will work at full speed.
Fan start PWM	● If the temperature is higher than the FAN start PWM value, the FAN will start work.
PWM SLOPE SETTING	● PWM SLOPE Selection

4.2.5 Serial Port 1 Configuration

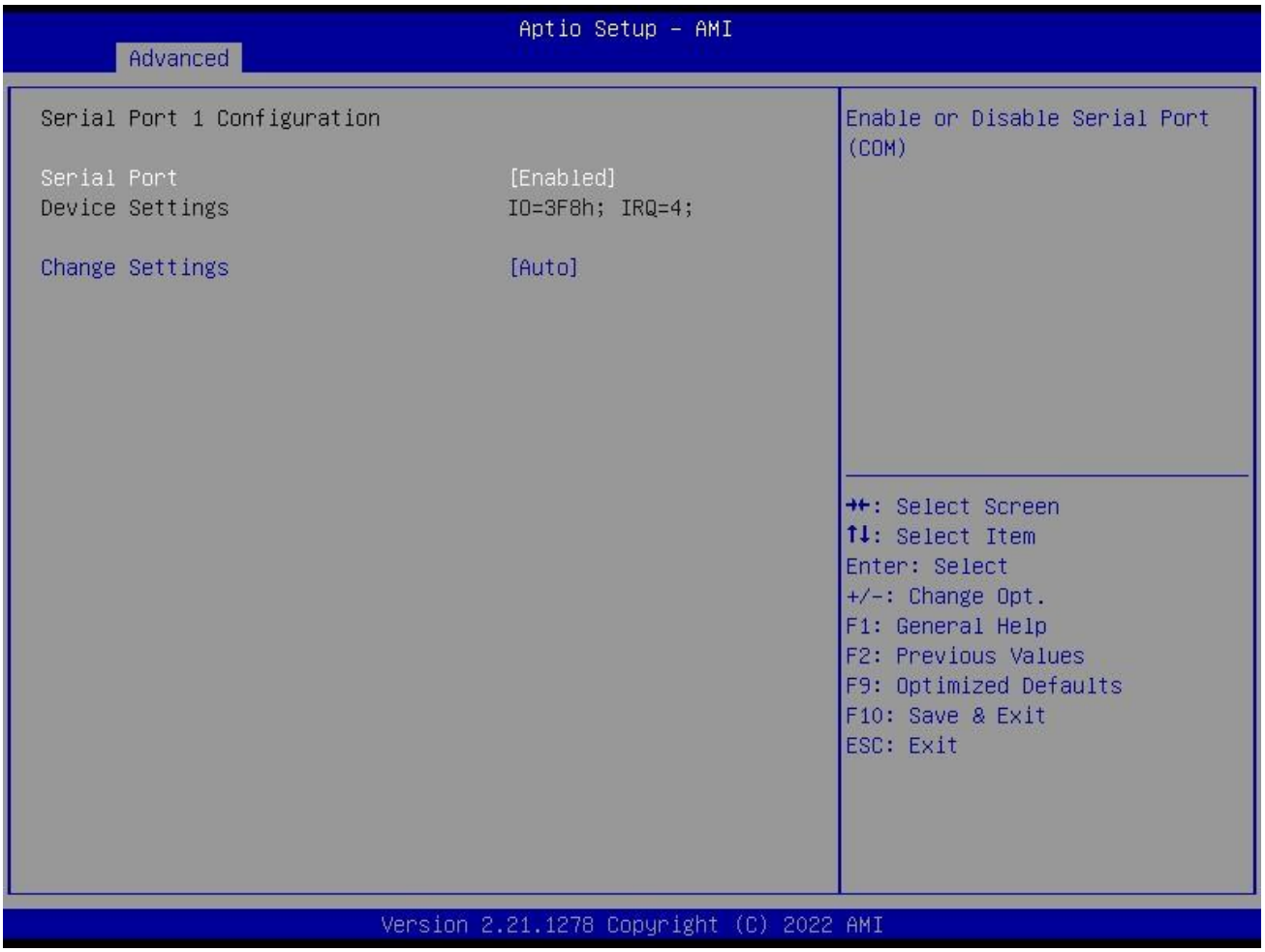

Super IO Configuration	Description
Serial Port 1 Configuration	
Serial Port	The serial port is enabled by default. ● Enabled ● Disabled.
Change settings	User can set the serial port by change settings option. ● Auto ● IO=3F8H; IRQ=4; ● IO=3F8H; IRQ=3, 4, 5, 6, 7, 9, 10, 11, 12; ● IO=2F8H; IRQ=3, 4, 5, 6, 7, 9, 10, 11, 12;

Super IO Configuration	Description
	● IO=3E8H; IRQ=3, 4, 5, 6, 7, 9, 10, 11, 12; ● IO=2E8H; IRQ=3, 4, 5, 6, 7, 9, 10, 11, 12.

4.2.6 Serial Port 2 Configuration

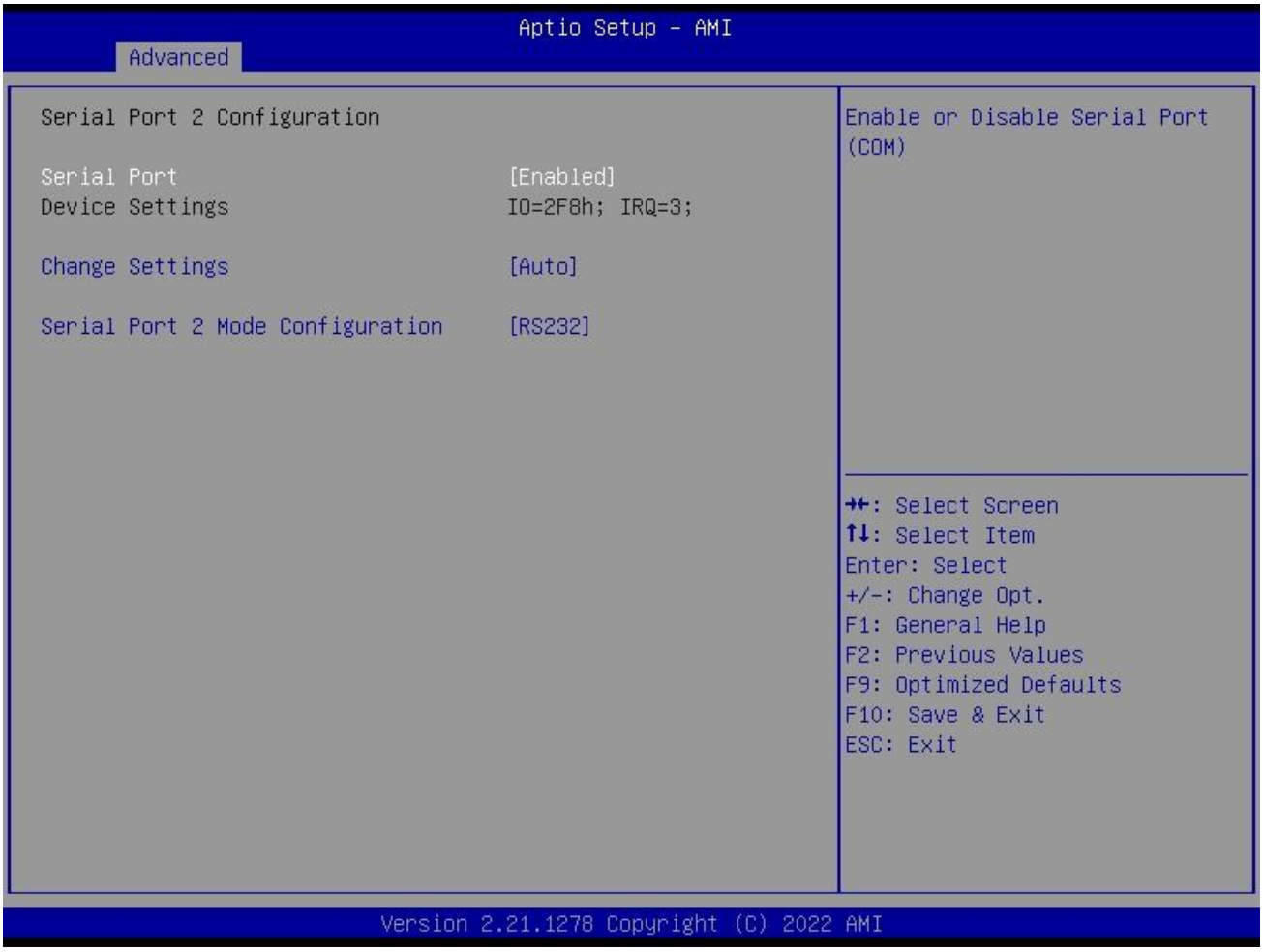

Super IO Configuration	Description
Serial Port 2 Configuration	
Serial Port	The serial port is enabled by default. ● Enabled ● Disabled.
Change settings	User can set the serial port by change settings option.

Super IO Configuration	Description
	● Auto ● IO=2F8H; IRQ=4; ● IO=3F8H; IRQ=3, 4, 5, 6, 7, 9, 10, 11, 12; ● IO=2F8H; IRQ=3, 4, 5, 6, 7, 9, 10, 11, 12; ● IO=3E8H; IRQ=3, 4, 5, 6, 7, 9, 10, 11, 12; ● IO=2E8H; IRQ=3, 4, 5, 6, 7, 9, 10, 11, 12.
Serial Port 2 Mode Configuration	● The serial port is RS232 by default.

4.2.7 OEM ME Configuration

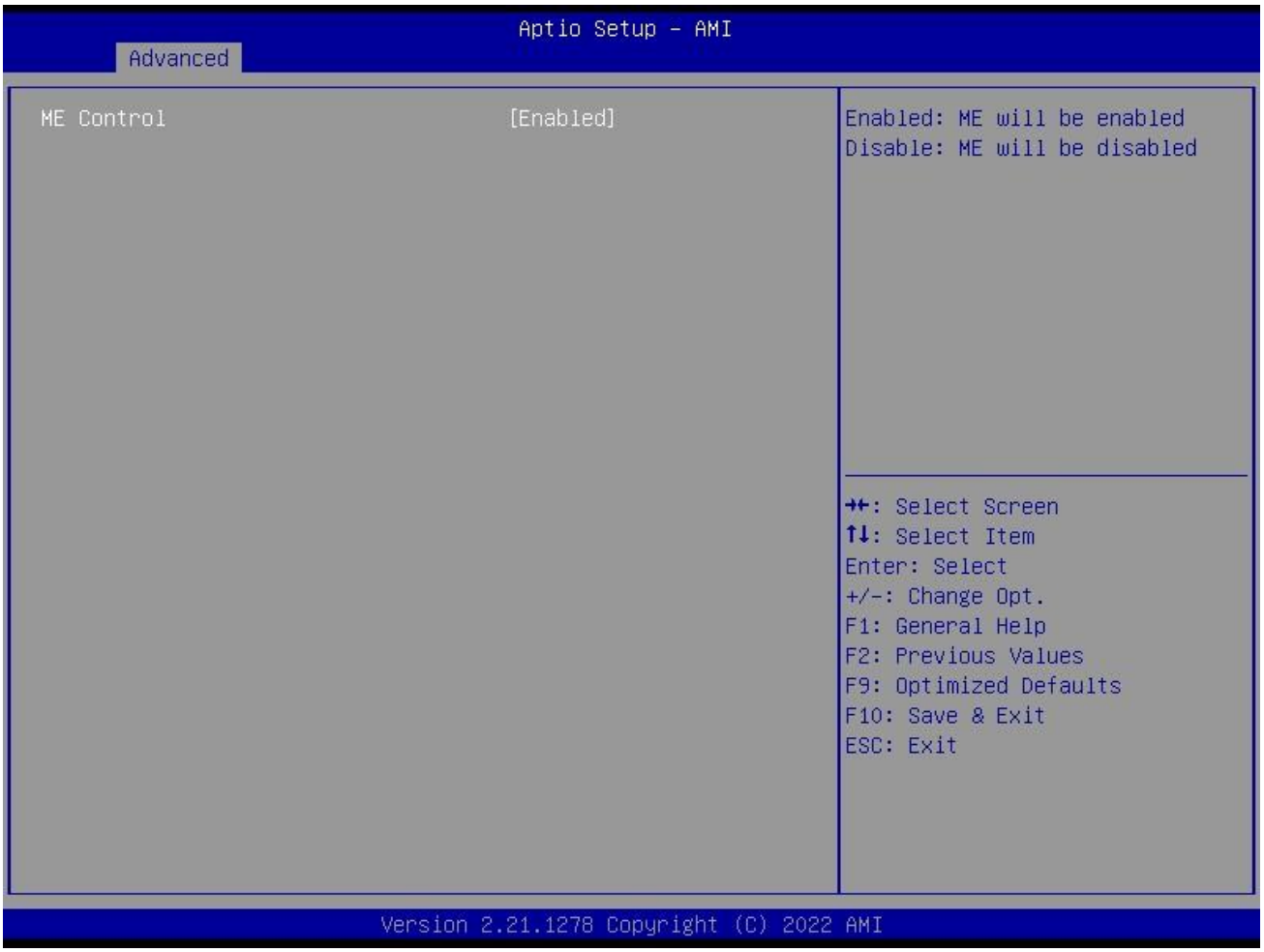

OEM Configuration Item	Description
ME Control	● Enables or disables ME Control.

4.2.8 System Devices Configuration

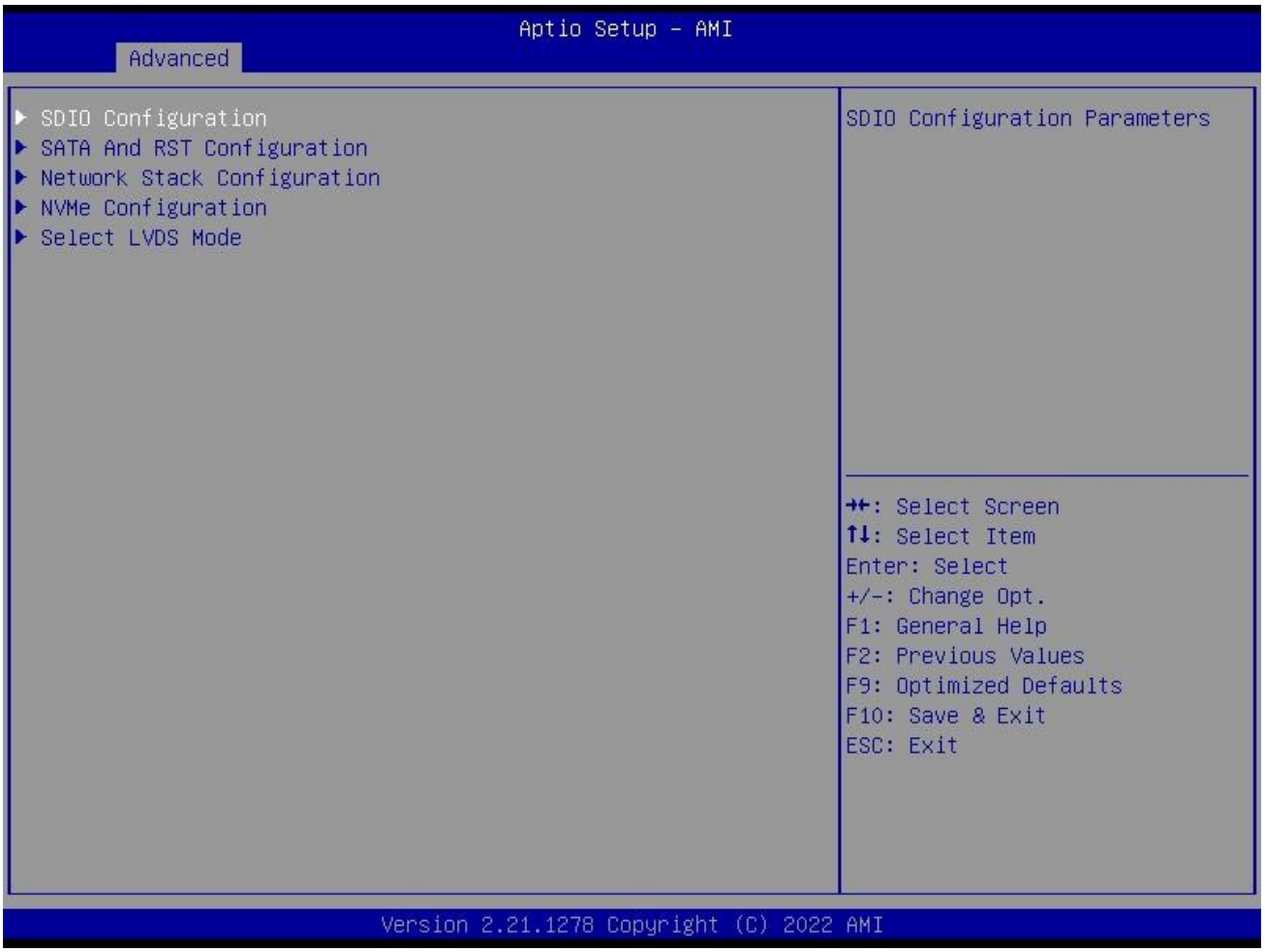

System Devices Configuration Item	Description
SDIO Configuration	
SATA And RST Configuration	
SATA Controller(s)	● Enable/Disable SATA Controller(s)
Serial ATA Port 0	● Serial ATA Port 0
Software Preserve	● Software Preserve

System Devices Configuration Item	Description
Port 0	● Enable or Disable SATA port.
Network Stack Configuration	
PXE Function	Enabled/Disabled UEFI Stack.. ● Disabled: The PXE function is disable by default. ● Enabled.
Ipv4 PXE Support	Enabled/Disabled IPV4 PXE boot support. If disabled IPV4 boot support will not be available. ● Enabled. ● Disabled. This item is disabled by default.
Ipv4 HTTP Support	Enabled/Disabled IPV4 PXE boot support. If disabled IPV4 boot support will not be available. ● Enabled. ● Disabled. This item is disabled by default.
Ipv6 PXE Support	Enabled/Disabled IPV6 PXE boot support. If disabled, IPV6 PXE boot support will not be available. ● Enabled. ● Disabled. This item is disabled by default.
Ipv6 HTTP Support	Enabled/Disabled IPV6 HTTP boot support. If disabled, IPV6 HTTP boot support will not be available. ● Enabled. ● Disabled. This item is disabled by default.
PXE boot wait time	● Wait time in seconds to press ESC key to abort the PXE boot. Use either +/- or numeric keys to set the value.
Media detect count	● Number of times the presence of media will be checked. Use either +/- or numeric keys to set the value.
● **NVME Configuration**	
● **Select LVDS Mode**	

4.3 Security Configuration

If this function is selected, the following information will appear:

Enter New Password hhhhhh

Then enter a password which is no more than eight characters and press <Enter>. BIOS will require to enter the password again.

Once you enter it again, BIOS will save the set password. Once the password item is enabled, you will be required to enter the password every time before the system entering to the setup program of BIOS. The user can set this item through the Security Option in advanced BIOS properties. If the Security Option is set as System, the password will be required to be entered before both the system guides and entering to the setup program of BIOS. If it is set as Setup, the password will be required to be entered only before the system entering to the setup program of BIOS.

To delete the password, press <Enter> in the popped-up window that requires to enter the password. Then information for confirmation will appear on the screen to allow you decide whether the password will be disabled. Once the password is disabled, you can enter the setup program directly without password when the system is restarted.

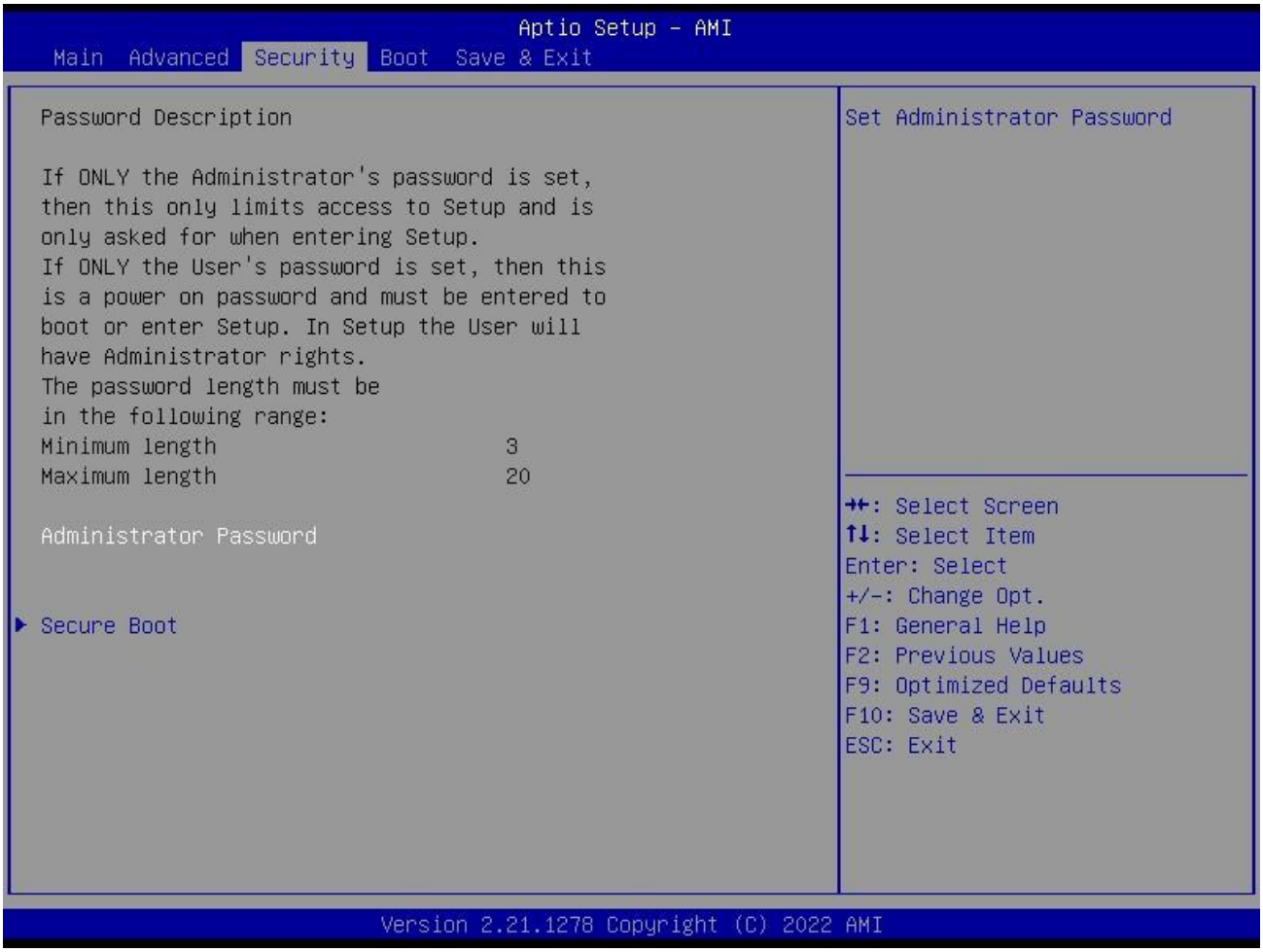

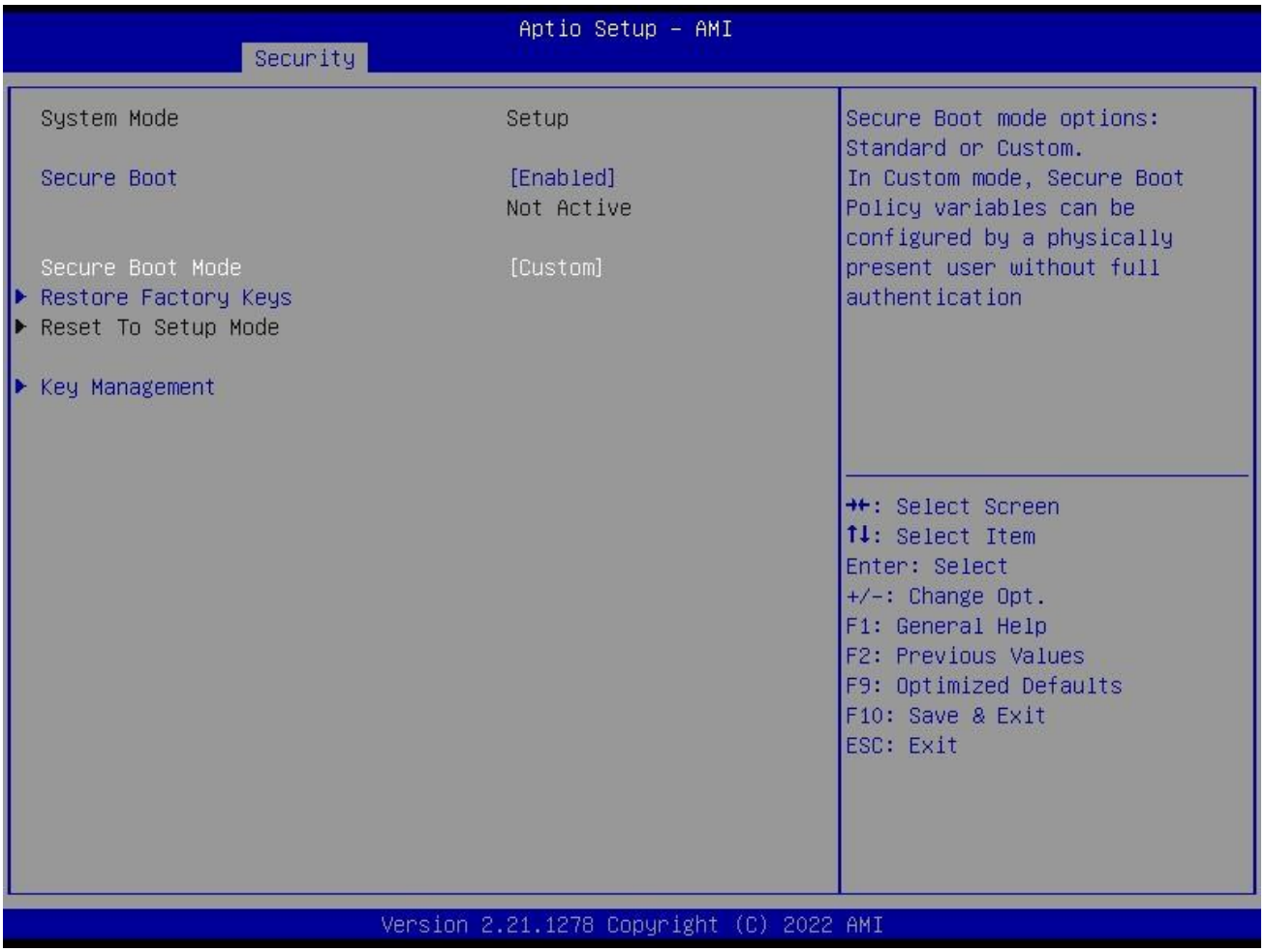

Secure Boot Item	Description
Secure Boot	● Secure boot feature is active if secure Boot is enabled, platform key(PK) is enrolled and the system is in user mode. The mode change requires platform reset.
Secure Boot Mode	● Secure Boot mode options: Stand or Custom. In Custom Mode, secure Boot Policy variables can be configured by a physically present user without full authentication.
Restore Factory keys	● Force System to User Mode.Install factory default Sercure Boot key databases.
Key Management	● Enables expert users to modify Secure Boot Policy variables without full authentication.

4.4 Boot

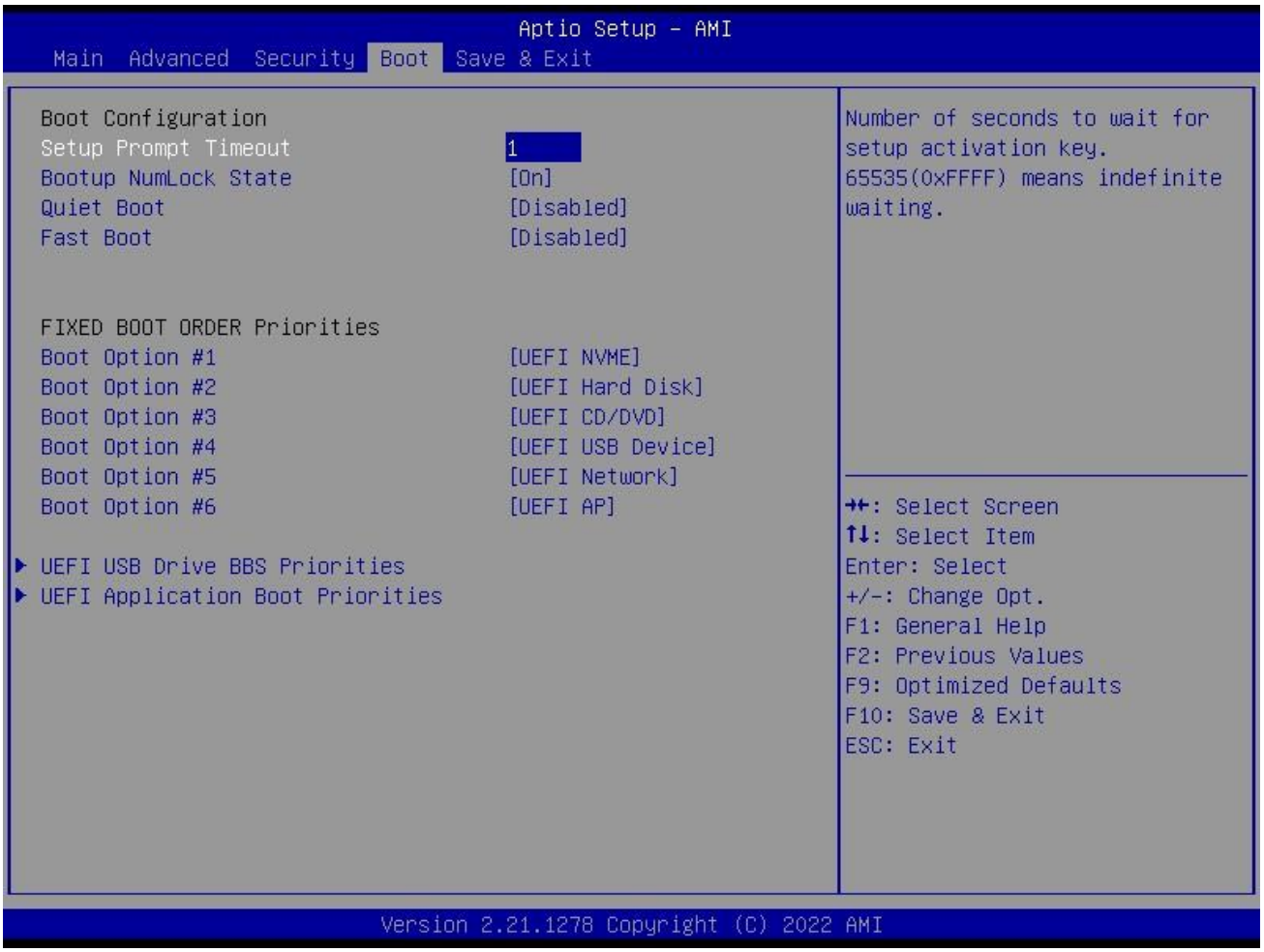
Aptio Setup - AMI
Main Advanced Security Boot Save & Exit
Boot Configuration
Setup Prompt Timeout 1
Bootup NumLock State [On]
Quiet Boot [Disabled]
Fast Boot [Disabled]
FIXED BOOT ORDER Priorities
Boot Option #1 [UEFI NVME]
Boot Option #2 [UEFI Hard Disk]
Boot Option #3 [UEFI CD/DVD]
Boot Option #4 [UEFI USB Device]
Boot Option #5 [UEFI Network]
Boot Option #6 [UEFI AP]
UEFI USB Drive BBS Priorities
UEFI Application Boot Priorities
Number of seconds to wait for setup activation key. 65535(0xFFFF) means indefinite waiting.
→←: Select Screen
↑↓: Select Item
Enter: Select
+/-: Change Opt.
F1: General Help
F2: Previous Values
F9: Optimized Defaults
F10: Save & Exit
ESC: Exit
Version 2.21.1278 Copyright (C) 2022 AMI

Boot Item	Description
Boot Configuration	
Setup Prompt Timeout	● This item is use to set the wait time of entering the operation system. During the BIOS post, if user doesn't press the keyboard, it won't respond unless you reboot the BIOS. The Setup Prompt Timeout is 3s by default. You can set the time as you want.
Bootup NumLock State	● Options are OFF and ON. In other words, this item can be used to set the state of Num Lock after entering the system. It can be set according to user's needs and doesn't affect the performance of the computer.
Quiet Boot	● If this item is set as Enabled, the system can be started within five seconds and some detection items will be ignored. The options are [Disabled] and [Enabled].
Fast Boot	● Enables or disables boot with initialization of a minimal set of devices required to launch active boot option. Has no effect for BBS boot option.
BOOT ORDER Priorities	
Boot Option #1	● The first boot device. If BIOS doesn't detect the first boot device, it will check the second boot device.
Boot Option #2	● The second boot device. If BIOS doesn't detect the second boot device, it will check the next boot device.
Boot Option #3	● The third boot device. If BIOS doesn't detect the third boot device, it will check the third next device.
Boot Option #4	● The fourth boot device. If BIOS doesn't detect the fourth boot device, it will check the next boot device.
Boot Option #5	● The fifth boot device. If BIOS doesn't detect the fifth boot device, it will check the next boot device.
Boot Option #6	● The six boot device. If BIOS doesn't detect the six boot device, it will check the next boot device.
UEFI USB Drive BBS Priorities	● Specifies the boot Device Priority sequence from available UEFI USB Application.
UEFI Application Boot Priorities	● Specifies the boot Device Priority sequence from available UEFI Application.

4.5 Save & Exit

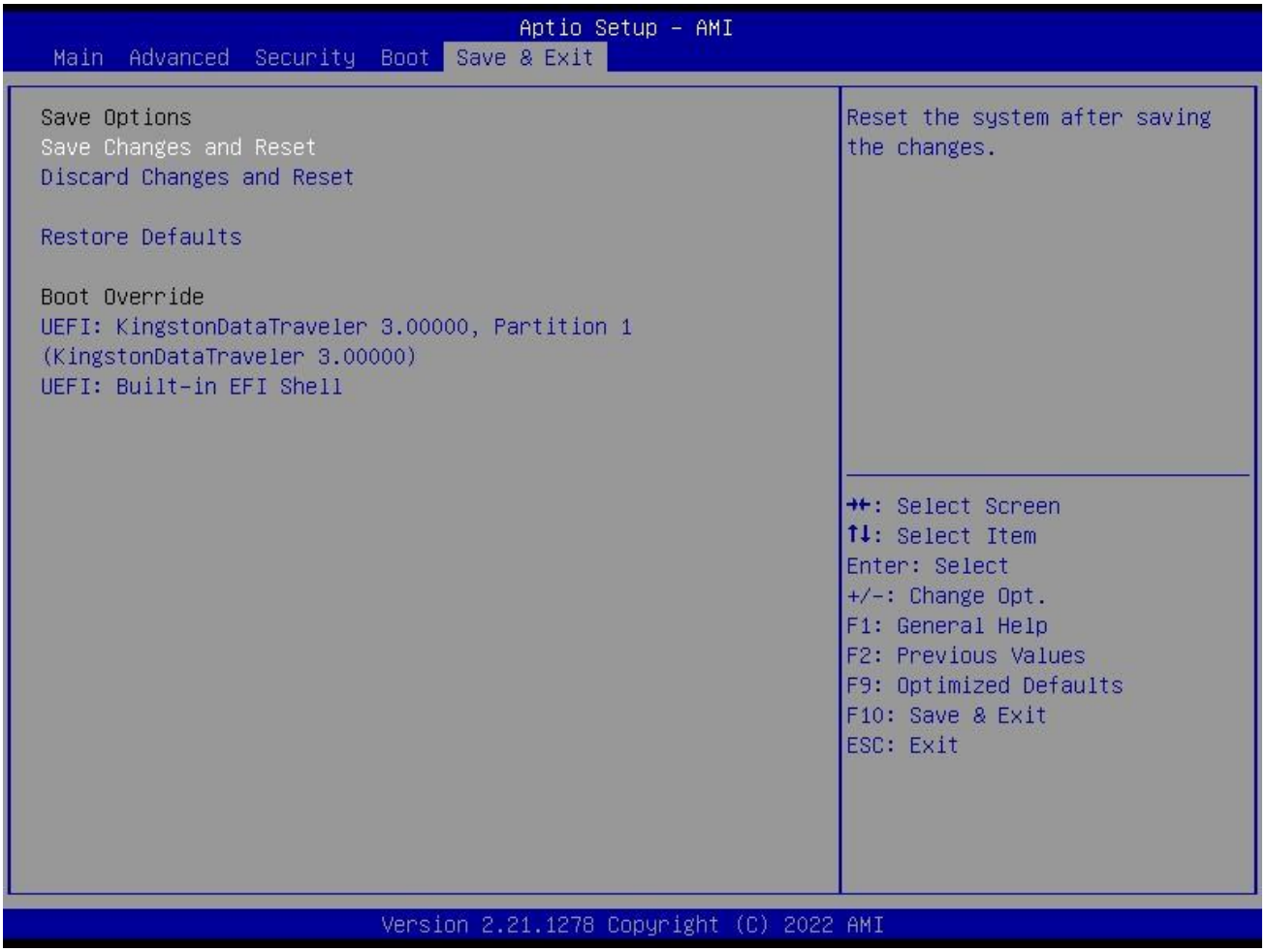

Save & Exit Item	Description
Save Options	
Save Changes and Reset	Save Changes and Reset.
Discard Changes and Exit	Give up the settings and exit.
Restore Defaults	Recover it to default.

4.6 Watchdog API and instruction

Please contact Giada FAE (email:support@giadatech.com) for watchdog API software and instruction.

Shenzhen JIEHE Technology Development Co., Ltd.

Website: www.giadatech.com

Phone: +86-755-33300336

Email: support@giadatech.com

Address: 1~2/F, Block A, Tsinghua Information Harbor, North Section,
Shenzhen Hi-tech Park, Nanshan District, Shenzhen, China