Giada

www.giadatech.com

IB3-708 User Manual

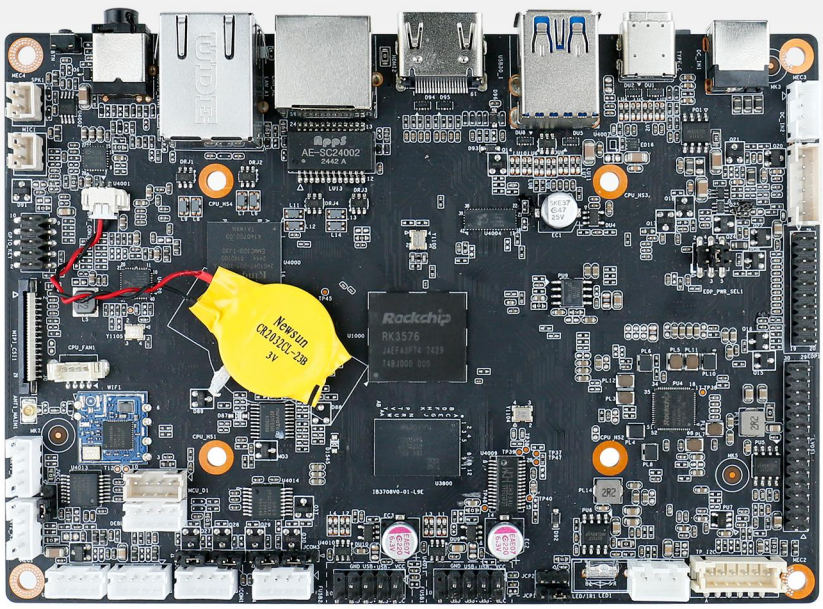

Shenzhen JIEHE Technology Development Co., Ltd.

Statement

The copyright of this manual belongs to Shenzhen JIEHE Technology Development Co., Ltd. (Giada, JIEHE's global brand) and all rights are reserved. The company reserves the right to change this manual at any time without notification. Specifications here are for reference only, please take the real product as standard.

Without official authorization of Giada, other companies or individuals may not copy, plagiarize, translate or disseminate this manual for commercial purposes.

The information provided in this manual is accurate and reliable. The company does not take any legal responsibility for the consequences of infringement use of this manual.

Safety Notice

- Read the user manual carefully before setting up the Giada product.
- Disconnect the power cord before installing the internal components
- Most electronic components are sensitive to static electrical charge, please wear a wrist-grounding strap when installing the internal components.
- Don't disconnect the power cord when the system is running to avoid damage to the sensitive components by instantaneous surge voltage.

Contact Information

Shenzhen JIEHE Technology Development Co., Ltd.

Website: www.giadatech.com

Phone: +86-755-3330 0336

Table of Contents

1.Product Introduction ..... - 4 -

2. Hardware Usage Instruction ..... - 4 -

2.1 Dimension Chart ..... - 4 -

2.2 Interface Definition ..... - 5 -

2.2.1 Board Jumper, Header And Interface Diagram ..... - 5 -

2.2.2 Board Jumper And Header Definition ..... - 5 -

2.3 Accessories Installation Steps ..... - 12 -

2.3.1 TF Card Installation ..... - 12 -

3.Firmware Upgrade Guide ..... - 12 -

3.1 Preparation ..... - 12 -

3.2 Upgrade the firmware ..... - 13 -

4. JAHC APP ..... - 17 -

4.1 JAHC APP functions ..... - 17 -

4.2 Startup(open) & shutdown(close) time setup ..... - 17 -

5. ADB SOP ..... - 19 -

1.Product Introduction

The ARM-based motherboard IB3-708 adopts Rockchip RK3576 octa-core Arm processor, including 4 Cortex-A72 cores with a main frequency of up to 2.2GHz, and 4 Cortex-A53 cores with a main frequency of 1.8GHz. With a built-in 6 TOPS NPU, this small-but-mighty single-board computer delivers exceptional AI performance right at the edge. It can support Android 14 or Debian 12, offering unparalleled software flexibility.

2. Hardware Usage Instruction

2.1 Dimension Chart

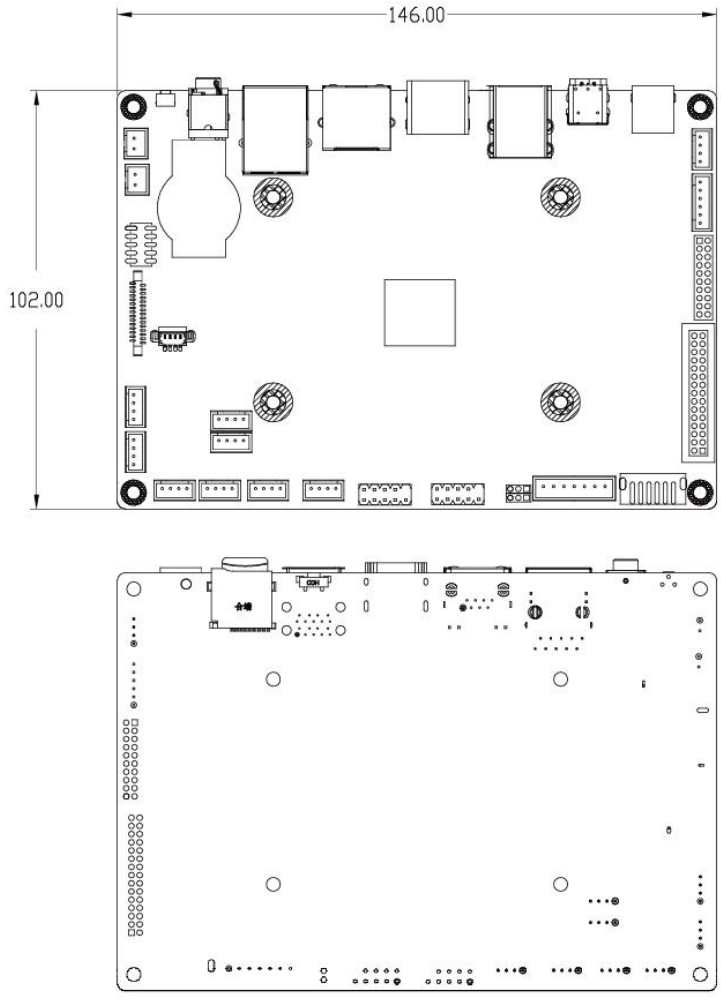

2.2 Interface Definition

2.2.1 Board Jumper, Header And Interface Diagram

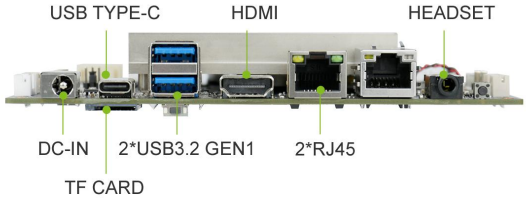

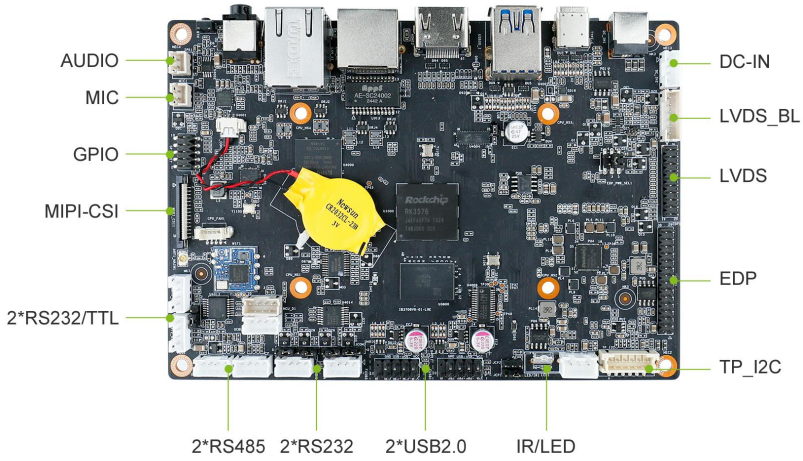

2.2.2 Board Jumper And Header Definition

No.	Jumper	Header	Function	PIN Definition
1	DC_IN2	DC_IN2	DC_IN 12V Interface	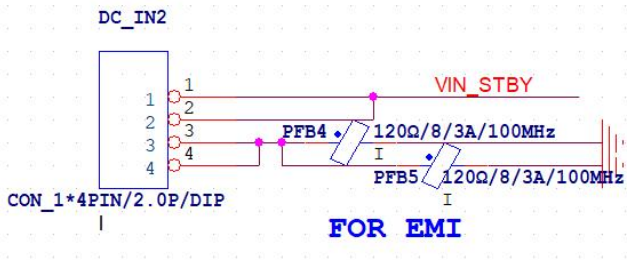
2	EDP_LVDS_INVT1	EDP_LVDS_INVT1	EDP、LVDS Backlight Interface	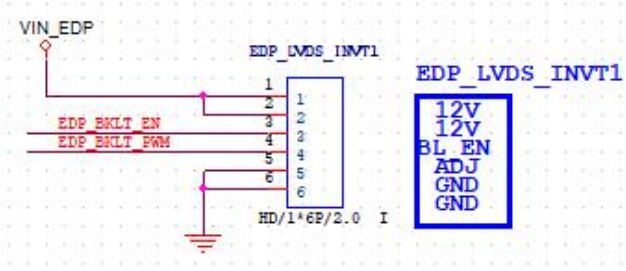

3	EDP_PWR_SEL1	EDP_PWR_SEL1	EDP、LVDS Power Selection Jumper	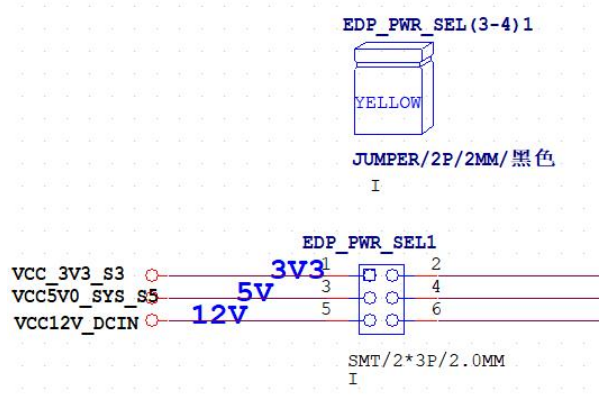
4	EDP1	EDP1	EDP Interface	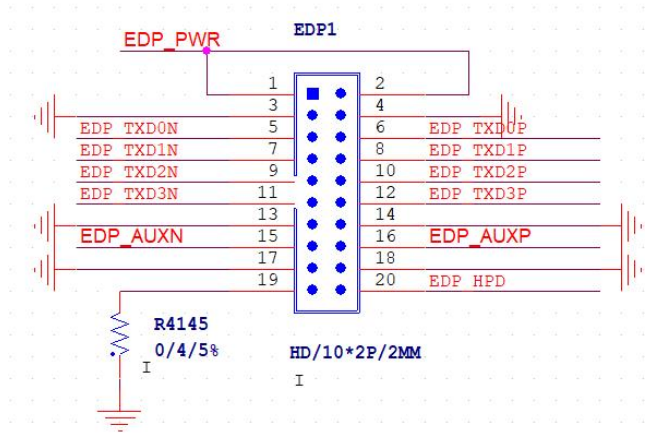
5	LVDS1	LVDS1	LVDS Interface	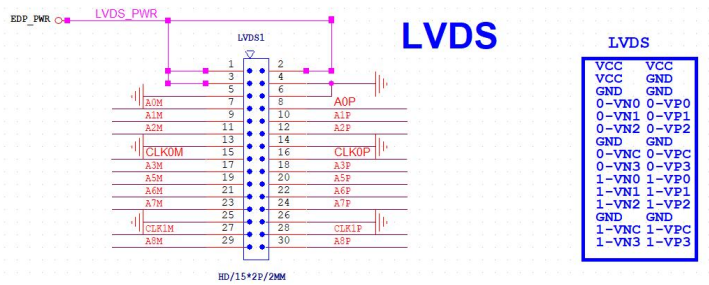
6	UART_F3, JCOM1, JCOM2	UART_F3, JCOM1, JCOM2	Serial port pins and serial port switch pins 1. JCOM1 and JCOM2 synchronize switch to 1-2,UART_F1 will be TLL 1.JCOM1and JCOM2 synchronize switch to 2-3,UART_F1 will be RS232	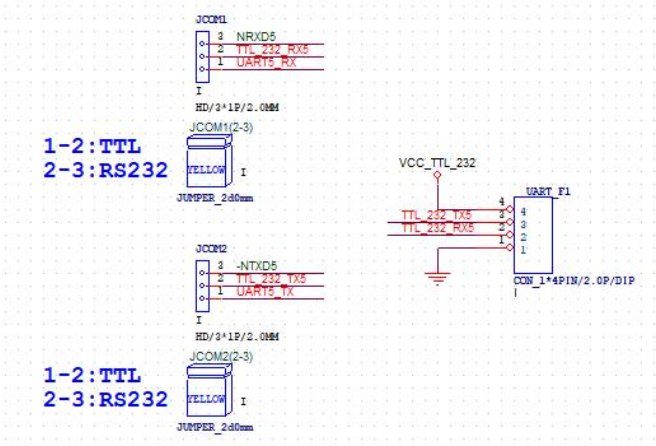

7	UART_F4, JCOM3, JCOM4	UART_F4, JCOM3, JCOM4	Serial port pins and serial port switch pins 1. JCOM3 and JCOM4 synchronize switch to 1-2,UART_F2 will be TLL 2.JCOM3 and JCOM4 synchronize switch to 2-3,UART_F2 will be RS232	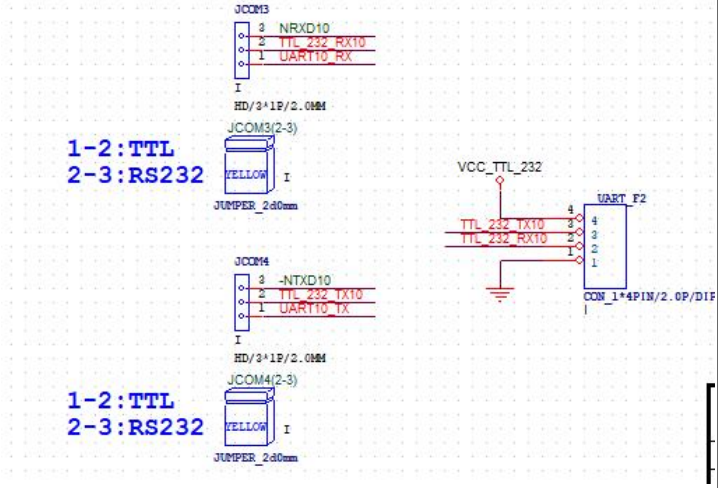
8	JVCC1	JVCC1	UART_F1 and UART_F2 Voltage switching pin 1-2：5V 2-3：3.3V	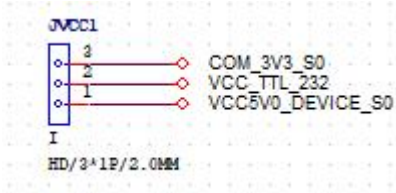
9	UART5_ RS485， UART6_ RS485	UART5_R S485， UART6_R S485	RS485 Pin	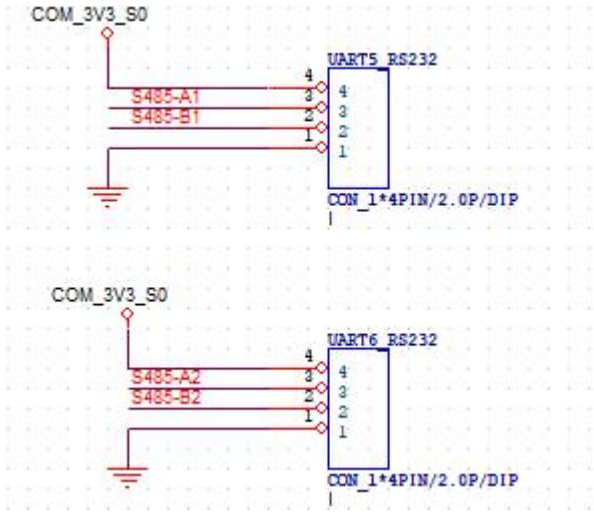

10	UART1_RS232 UART2_RS232	UART1_RS232 UART2_RS232	RS232 Pin	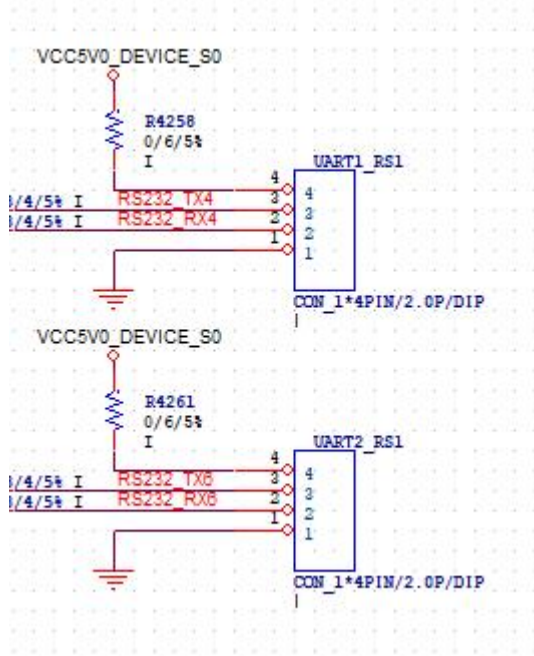
11	DEBUG1	DEBUG1	DEBUG Debugging the serial port	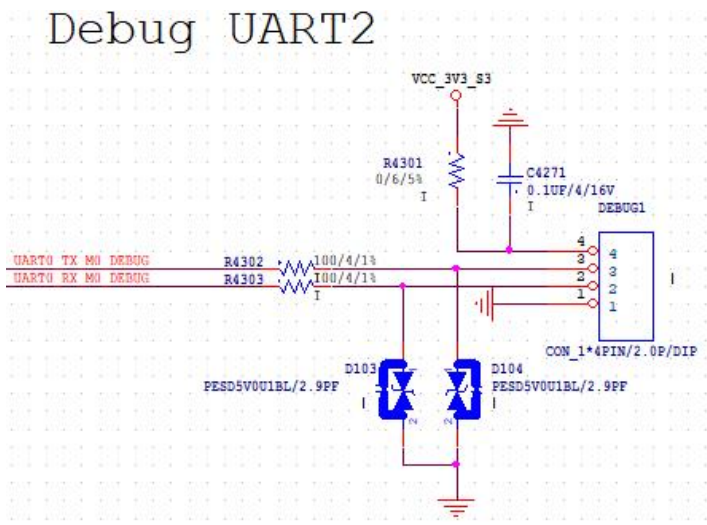
12	MCU_D1	MCU_D1	MCU_JAHC1 Burn-in pins	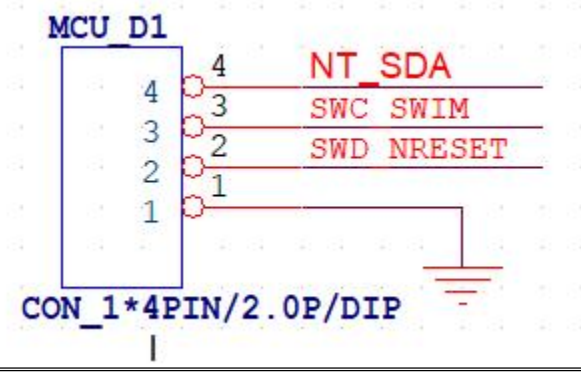

13	CPU_FAN1	CPU_FAN1	CPU Fan Pin	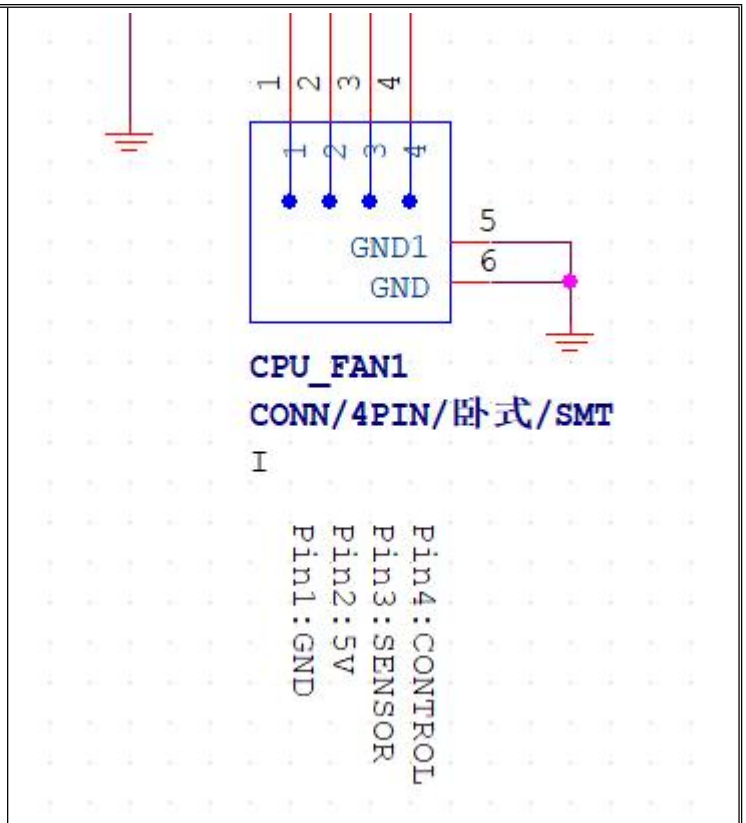
14	IR1	IR1	Infrared receiver pin connector	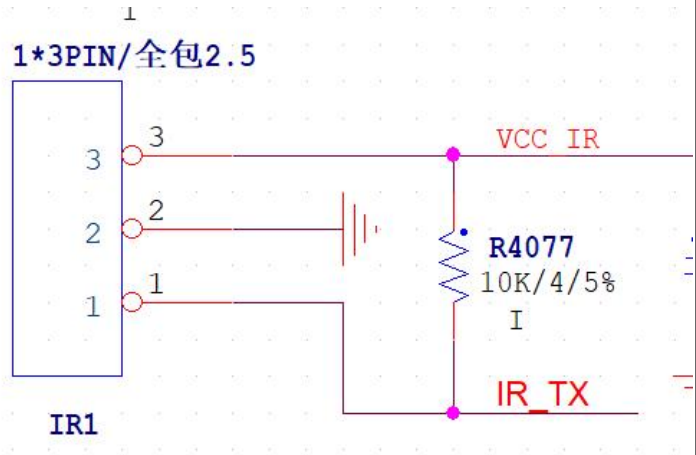

15	FUSB1,FUSB2	FUSB1,FUSB2	USB2.0*4	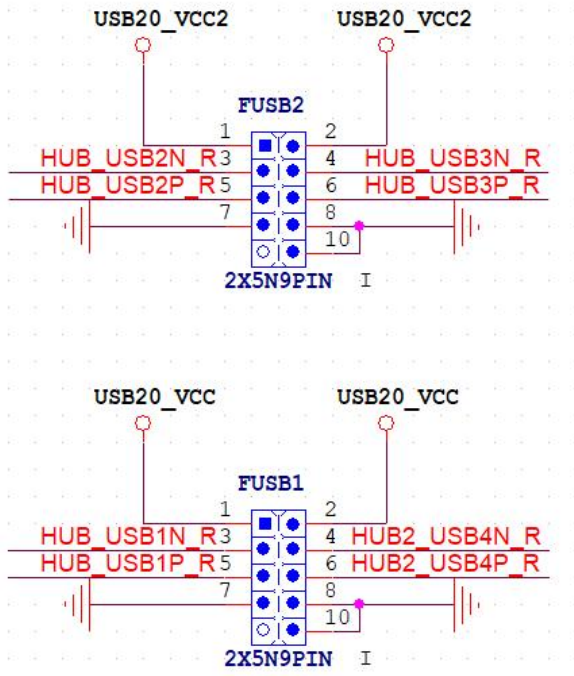
16	TP_I2C	TP_I2C	TP_I2C Pin	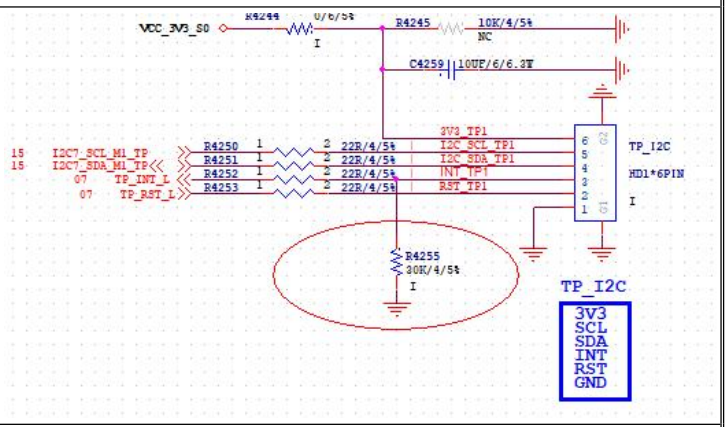
17	BAT_CON1	BAT_CON1	3.3V Battery Pin	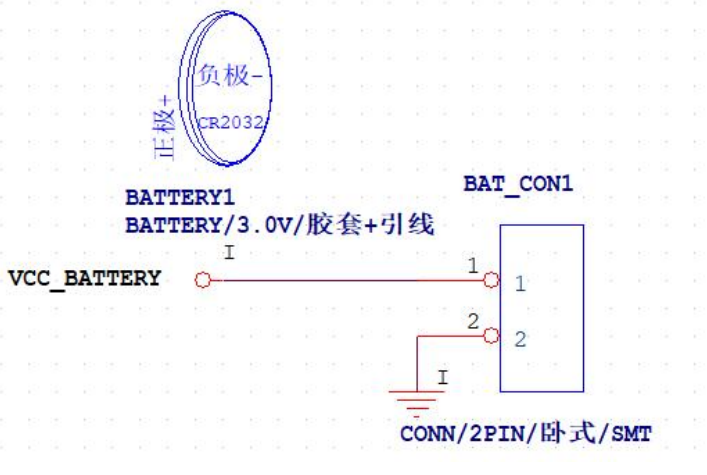

18	GPIO_KEY	GPIO_KEY	GPIO Pin	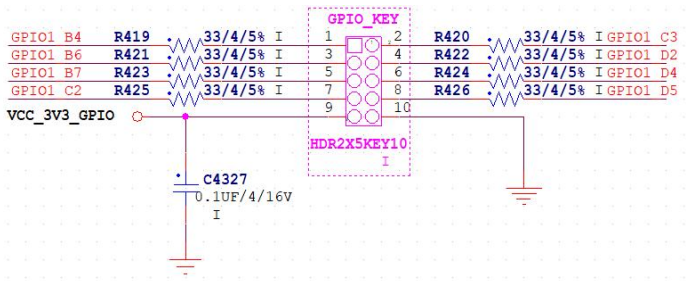
19	SPK1	SPK1	SPEAKER Pin	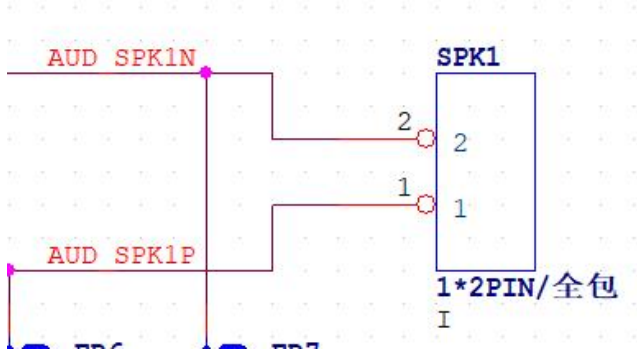
20	MIC1	MIC1	MIC Pin	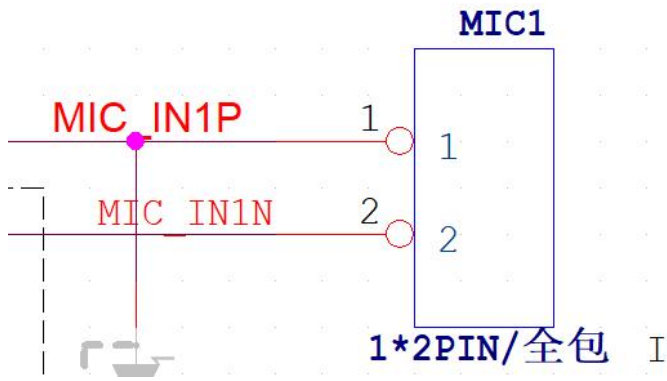
21	MIPI_CSI1	MIPI_CSI1	Camera Pin	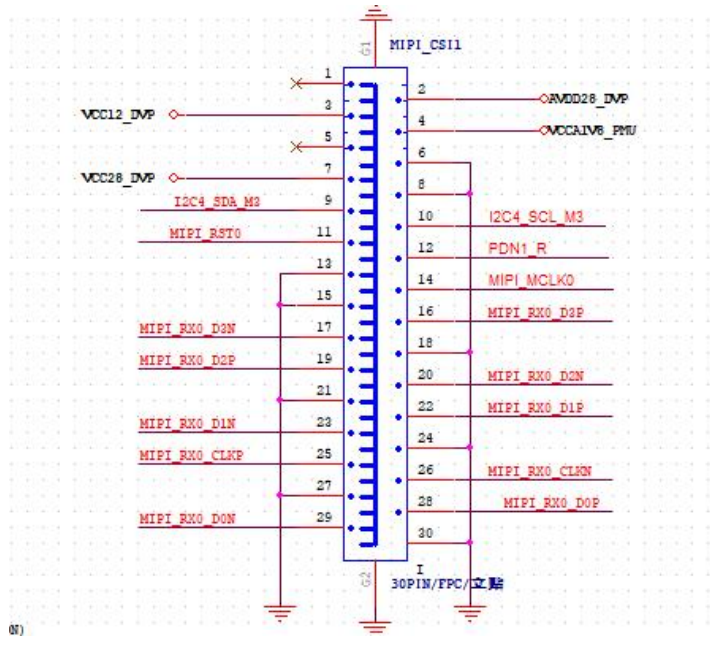

2.3 Accessories Installation Steps

⚠ For safety reasons, please ensure that the board is disconnected with power before installation.

2.3.1 TF Card Installation

1. Locate the TF Card slot.
2. Align the TF card with the slot, the gold contacts should face down, and the notched corner of the card should align with the corresponding notch in the slot.

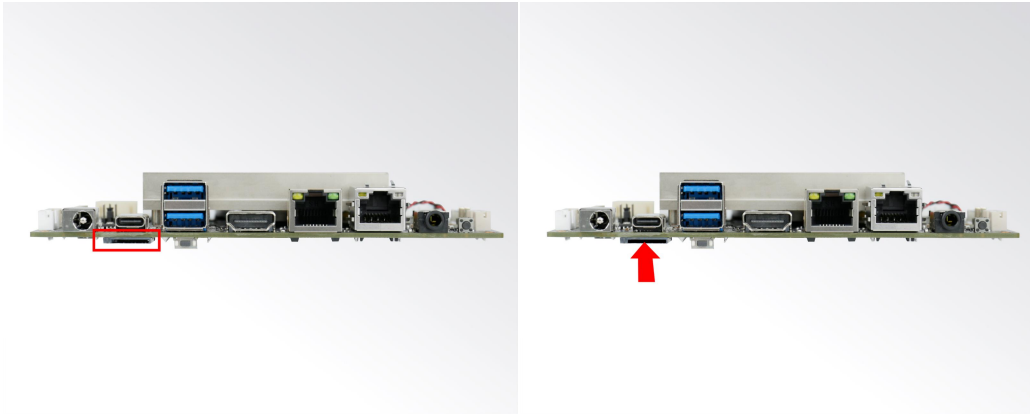

3. Firmware Upgrade Guide

3.1 Preparation

- IB3-708 player
- Archive of IB3-708 firmware provided by Giada technical support
- Host PC with screen and installed the Windows operation system.
- USB OTG Cable (RP-SMA Male ↔ Type-C Male)



After you get the Archive from Giada technical support, copy the Archive to your host PC, you will find below files inside:

- Android Tool - tool for updating
- IB3-708 Firmware image.
- DriverAssitant - tool to install drivers and firmware image file



3.2 Upgrade the firmware

3.2.1. Install the driver in your host PC by following steps:

a. Click the DriverAssitant file. Launch RK DriverAssitant and press “Install Driver”.

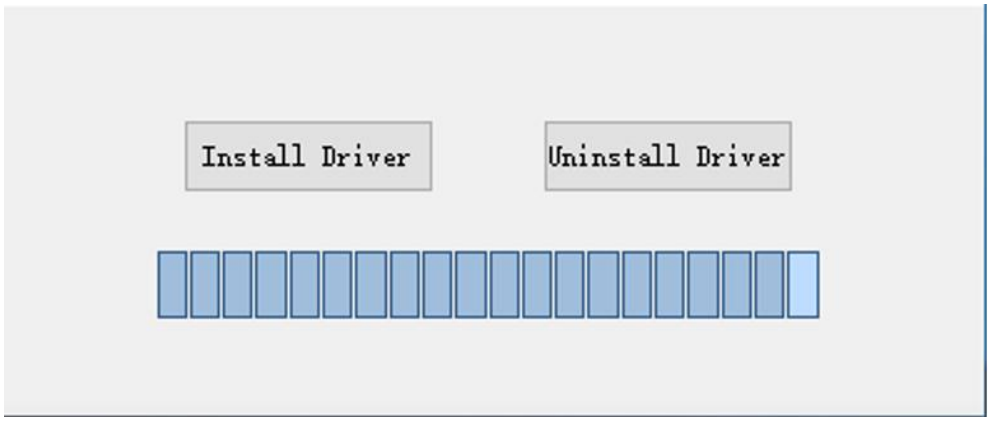

Apply all changes and warnings during the installation.

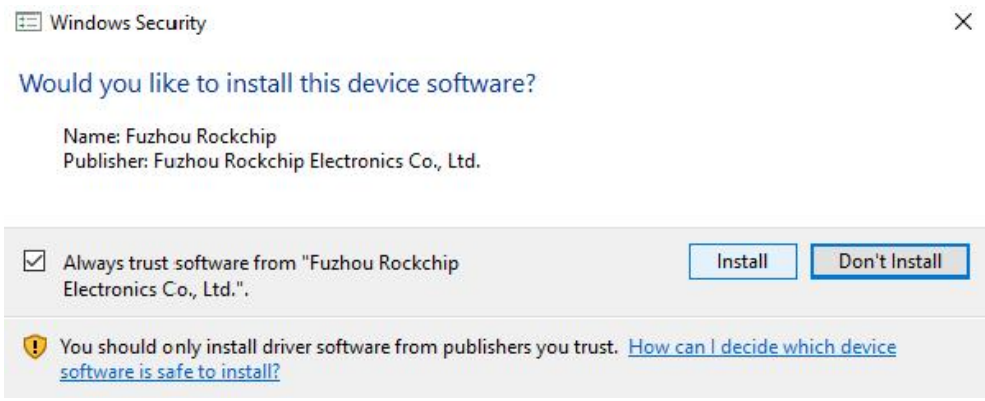

b. Click “ok” after the installation finish

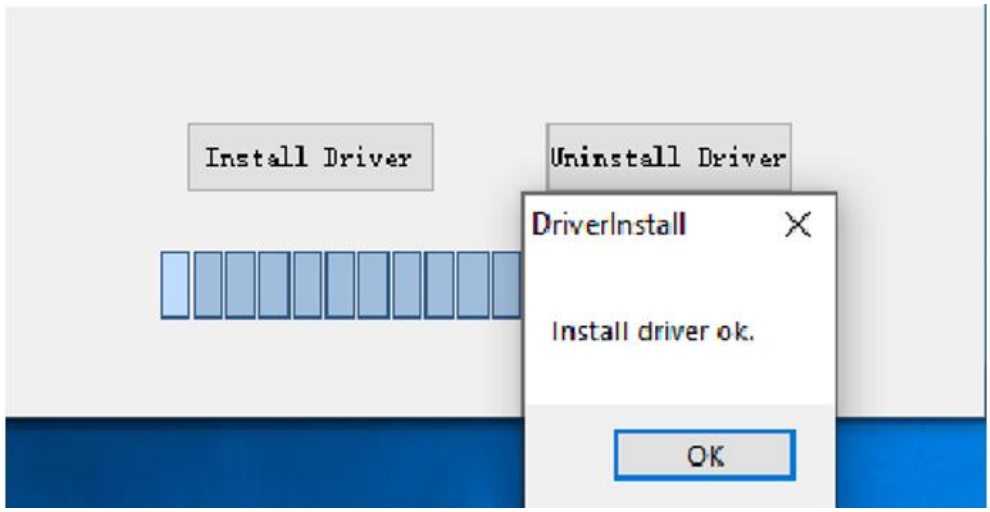

3.2.2. Connect the IB3-708 with host PC

In order to connect the IB3-708 with Host PC and run bootloader mode, you should perform following steps:

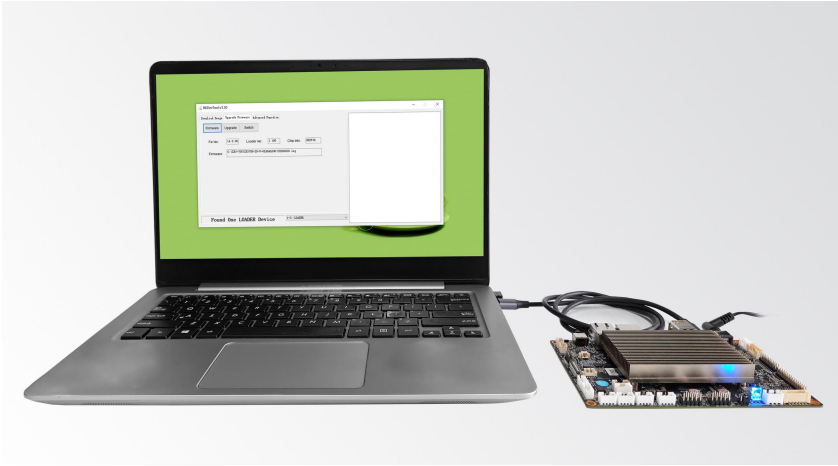

a. Please ensure that the power of the IB3-708 player is disconnected
b. Run RK Android tool V2.93 under the windows of the host PC.
c. Connect the IB3-708 player to the host PC via USB OTG port. (please refer to Fig 1for location of the OTG port)
d. Firstly, hold the IB3-708 player recovery button (please refer to Fig1 for the location of the button), then connect the power adaptor to the player, you will see “Found a MSC Device” or “Found One Loader Device”. (Please refer to Fig2)

⚠ Please don't loosen the button and don't press twice until you see the “Found a MSC Device” or “Found One loader Device”.

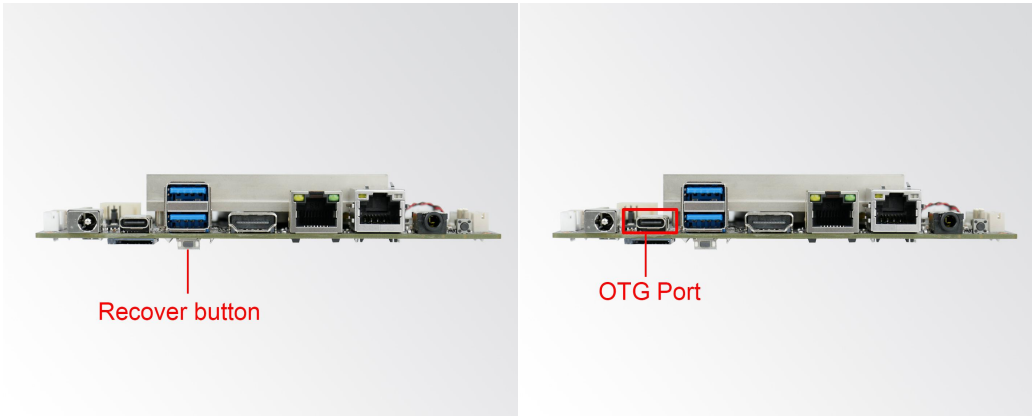

(Fig1)

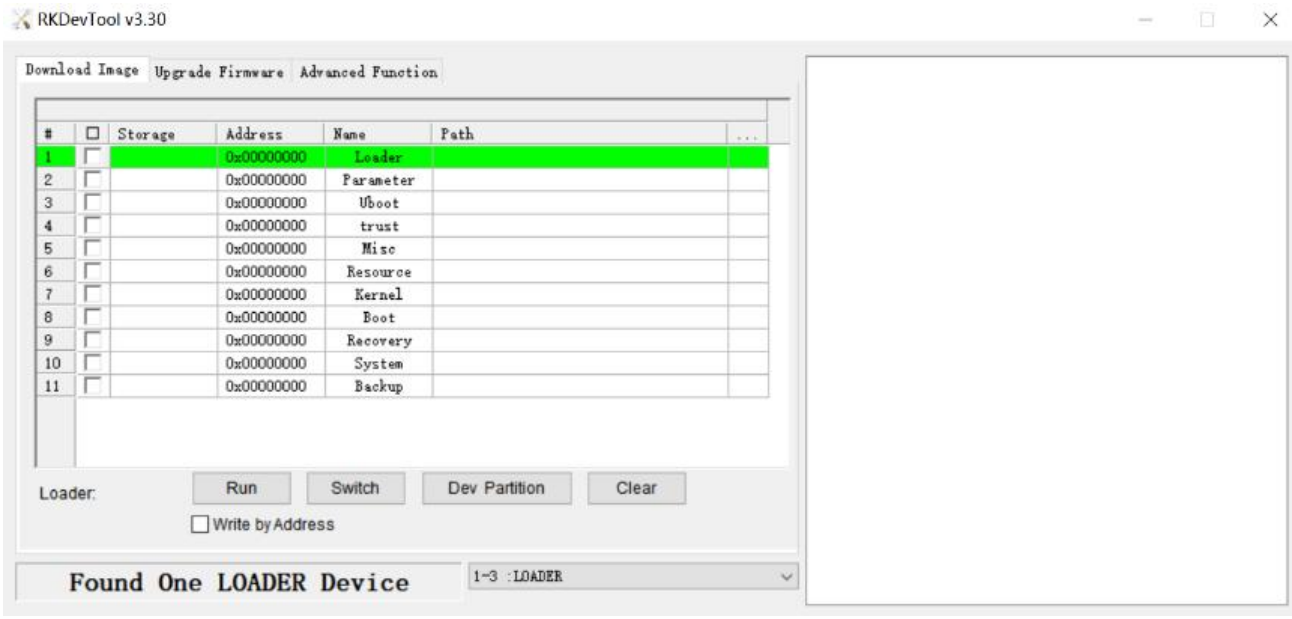

(Fig2)

3.2.3. Start the firmware updating.

a. Click “Firmware” button and specify the path to the firmware file which is stored in the host PC (Please refer to Fig2).

b. Wait around 5 seconds to upload the program, FW information will display on the screen. After the “Upgrade” button turns to black, you can click “Upgrade” to update the firmware (please refer to Fig3 and Fig4).



(Fig3)

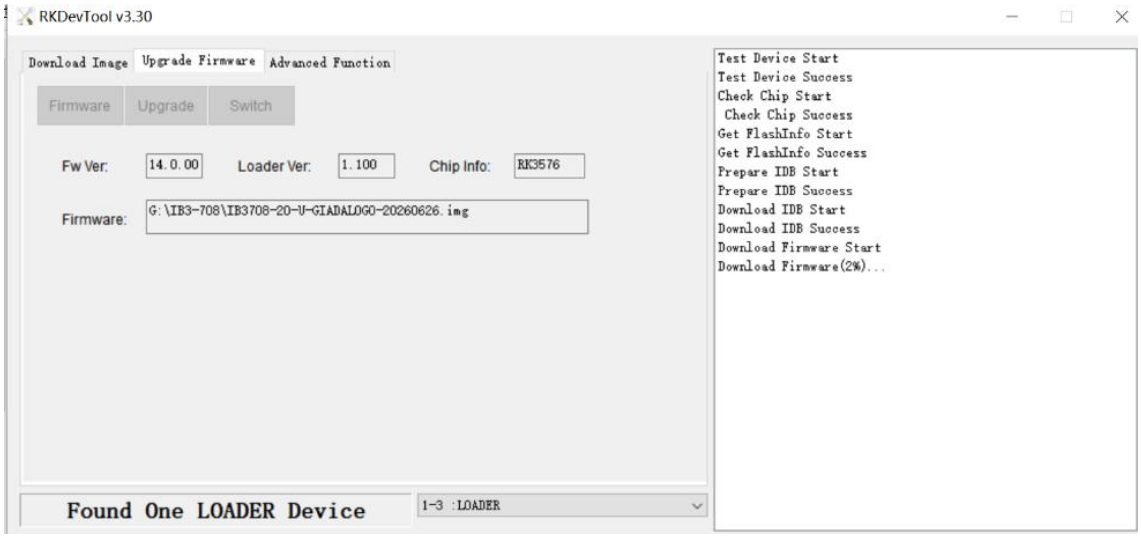

(Fig4)

c. In the end, you will see a report indicating a successful operation.

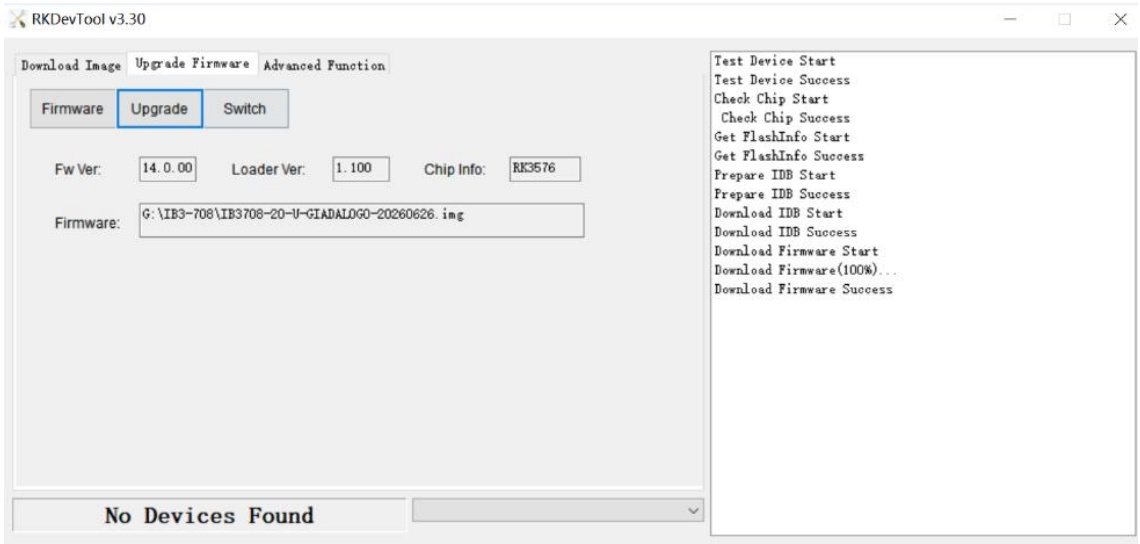

4. JAHC APP

4.1 JAHC APP functions

The user can set up automatic startup and shutdown, one week as a circle.

4.2 Startup(open) & shutdown(close) time setup

System Requirements:

- Giada player with JAHC APP function.
- Android OS includes JAHC APP (please refer to Fig1).

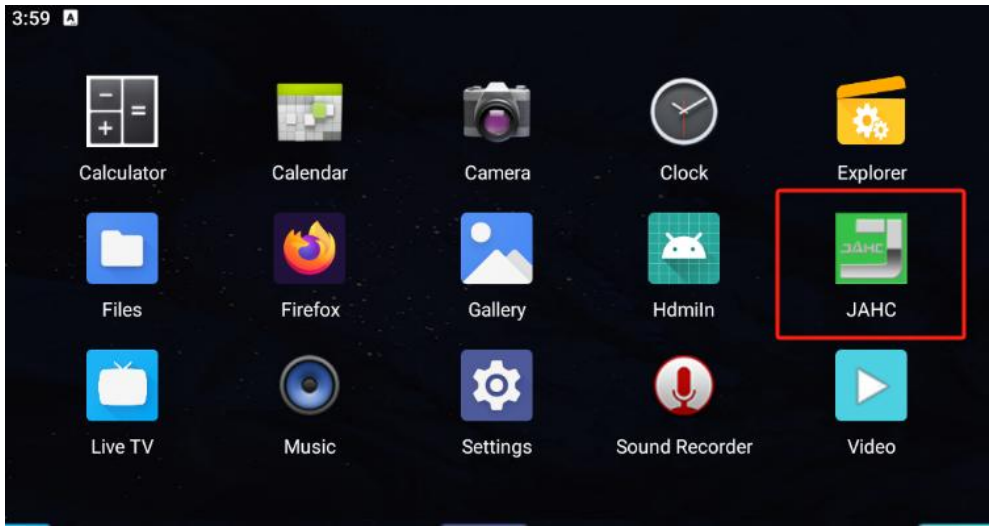

(Fig1)

a. After enter the android desktop, click the JAHC APP icon and the JAHC interface will pop up (please refer to Fig2).

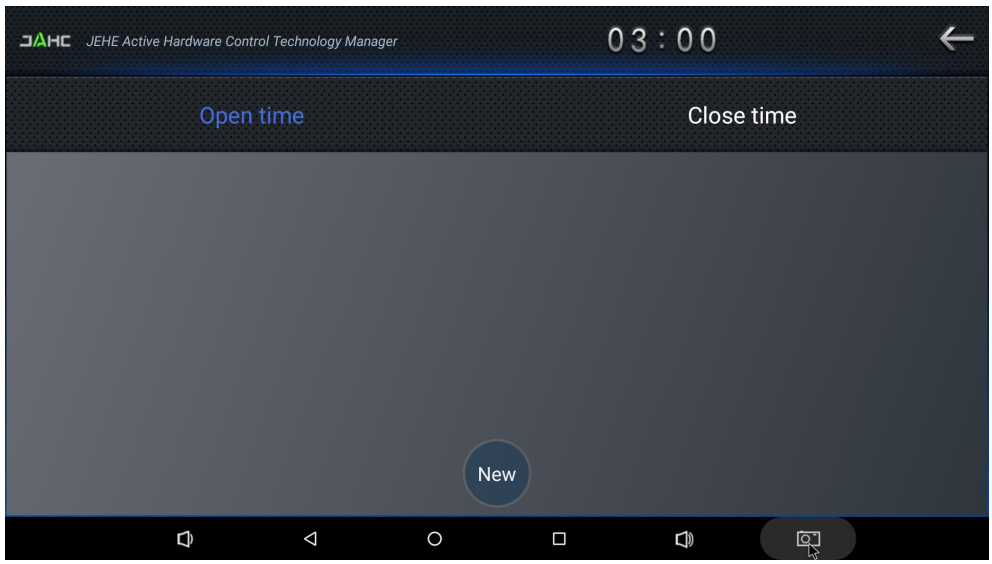

(Fig2)

b. Click ‘New’ button to set open time (Fig3) and then click Close time button to set close time. One

week as a circle, maximum 3 schedules per day. Select each schedule to set up the Open time and Close time.

c. After finishing the setup, click circles to launch the schedule.

User can click delete to remove the schedule.

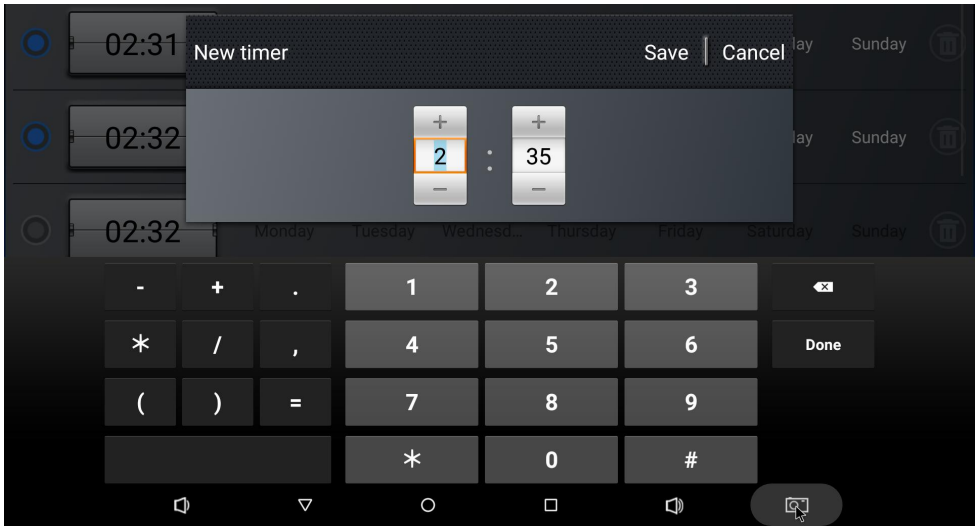

(Fig3)

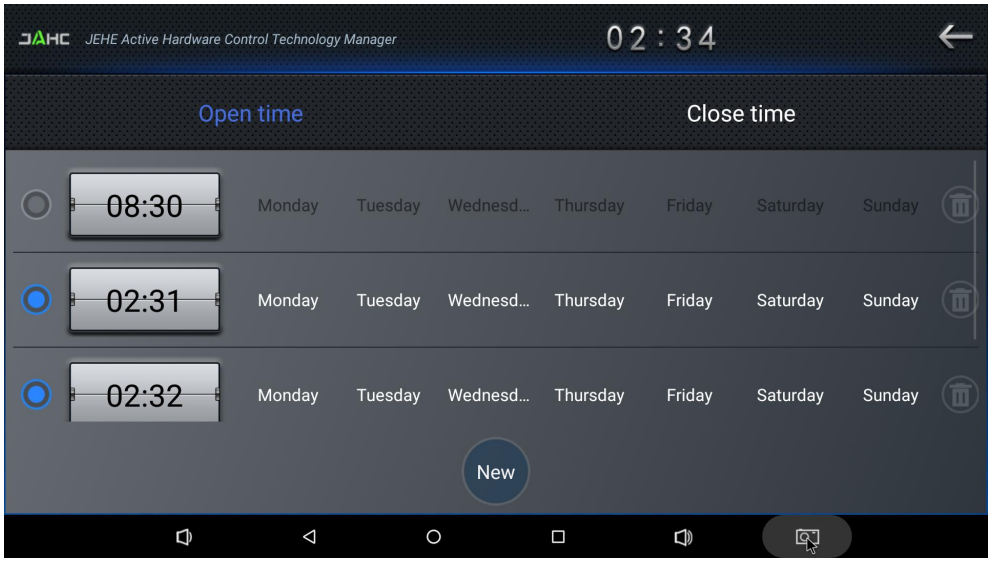

(Fig4)

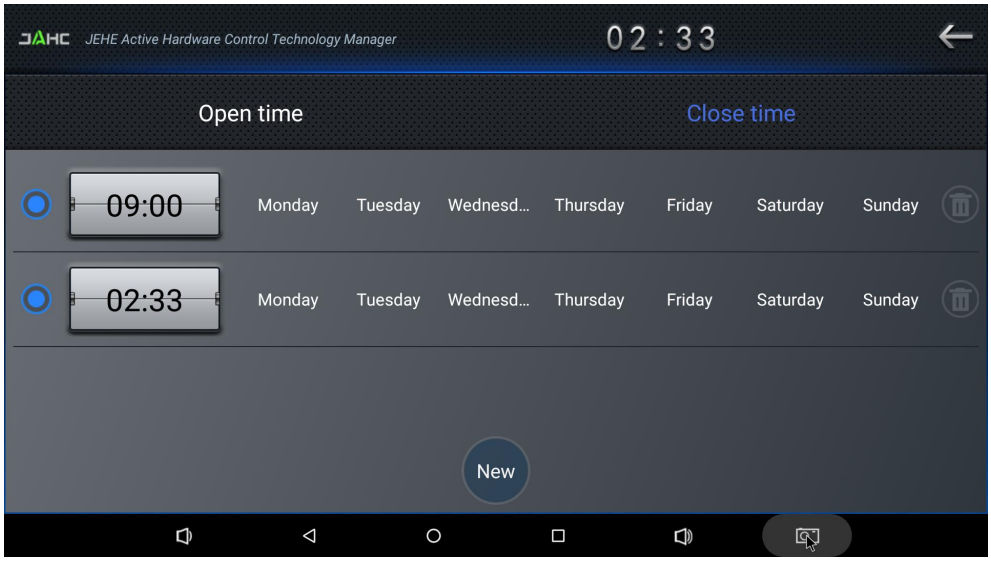

(Fig5)

⚠ Caution: If the interval from shutdown time to next resume time is less than 3 minutes, the system will not shut down.

5. ADB SOP

The user can debug APP with ADB driver by below steps:

1.Use command ADB version to check if Windows ADB tool is installed.

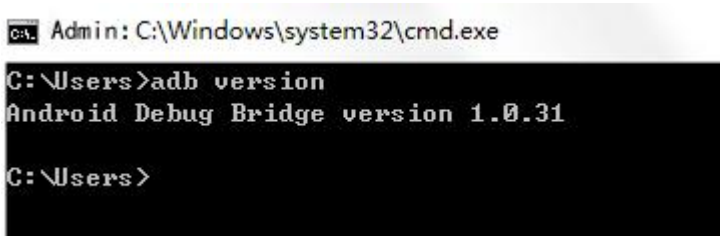

2. Install Rock chip driver.

a. Connect IB3-708 with OTG cable to windows PC host.

b. Select ‘Connect to PC’ under android OS->Settings->USB->connect to PC.

c. Then you can use ADB shell command to enter ADB.

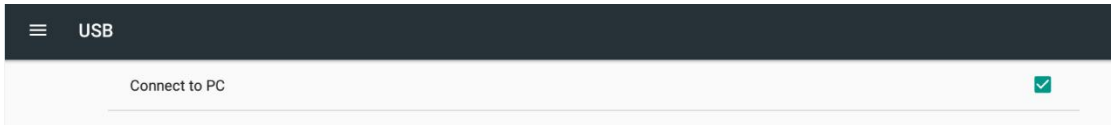

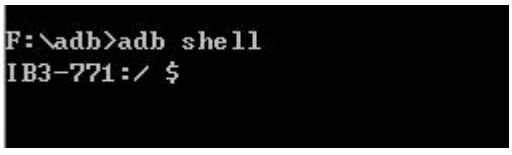

Shenzhen JIEHE Technology Development Co., Ltd.
Website: www.giadatech.com
Phone: +86-755-3330 0326
Email: support@giadatech.com
Address: 37F, Holdfound Sky Plaza Office Building, 11008 Beihuan Blvd., Nanshan, SZ, China, 518051

HIGH-DEFINITION MULTIMEDIA INTERFACE

The terms HDMI, HDMI High-Definition Multimedia Interface, and the HDMI Logo are trademarks or registered trademarks of HDMI Licensing Administrator, Inc.