Giada

www.giadatech.com

# CB5-108 User Manual

Shenzhen JIEHE Technology Development Co., Ltd.

## Statement

The copyright of this manual belongs to Shenzhen JIEHE Technology Development Co., Ltd. (Giada, JIEHE's global brand) and all rights are reserved. The company reserves the right to change this manual at any time without notification. Specifications here are for reference only, please take the real product as standard.

Without official authorization of Giada, other companies or individuals may not copy, plagiarize, translate or disseminate this manual for commercial purpose.

The information provided in this manual is accurate and reliable. The company does not take any legal responsibility for the consequences of infringement use of this manual.

## Safety Notice

• Read the user manual carefully before setting up the Giada product.
• Disconnect the power cord before installing the internal components
• Most electronic components are sensitive to static electrical charge, please wear a wrist-grounding strap when installing the internal components.
• Don't disconnect the power cord when the system is running to avoid damage to the sensitive components by instantaneous surge voltage.

## Contact Information

**Shenzhen JIEHE Technology Development Co., Ltd.**
**Website:** www.giadatech.com
**Phone:** +86-755-3330 0326
**Email:** support@giadatech.com
**Address:** 37F, Holdfound Sky Plaza Office Building, 11008 Beihuan Blvd.,
Nanshan, SZ, China, 518051

# Table of Contents

**1. Product Introduction ..... 5**

1.1 Brief Introduction ..... 5

1.2 Motherboard Picture ..... 5

**2. Hardware Usage Instruction ..... 5**

2.1 Dimensions Chart ..... 5

2.2 Interface Definition ..... 6

2.2.1 Board Jumper, Header And Interface Diagram ..... 6

2.2.2 Board Jumper And Header Definition ..... 7

**3. Accessories Installation Steps ..... 11**

3.1 Memory Installation ..... 11

3.2 SSD (M.2) Installation ..... 12

3.3 WIFI (PCIE) Installation ..... 12

3.4 GPU Installation ..... 13

**4. Bios Setup ..... 14**

4.1 Main (Standard CMOS setting) ..... 17

4.2 Advanced (Advanced BIOS setup) ..... 18

4.2.1 AMD CBS Setting ..... 18

4.2.2 Trusted Computing ..... 20

4.2.3 ACPI Settings ..... 22

4.2.4 Hardware Monitor ..... 23

4.2.5 S5 RTC Wake Settings ..... 25

4.2.6 Network Stack Configuration ..... 26

4.2.7 Serial Port Mode ..... 28

4.2.8 GPIO Configure ..... 29

4.3 Security (set the administrator/user password) ..... 30

4.4 Boot Menu ..... 31

4.5 Save & Exit ..... 33

# 1. Product Introduction

## 1.1 Brief Introduction

Giada CB5-108 is built on AMD Ryzen Embedded 7000 & 8000 series SoC, TDP≤45W platforms, delivering an ideal balance of performance and power efficiency for embedded applications. Supporting AMD 7640HS, 8845HS, 8645HS, 8840U, 8640U, the motherboard provides responsive computing performance for Slot Machines, Electronic Roulette gaming applications. With support for up to 96 GB of DDR5 memory, the CB5-108 ensures smooth multitasking and reliable operation in demanding edge computing environments.

## 1.2 Motherboard Picture

# 2. Hardware Usage Instruction

## 2.1 Dimension Chart

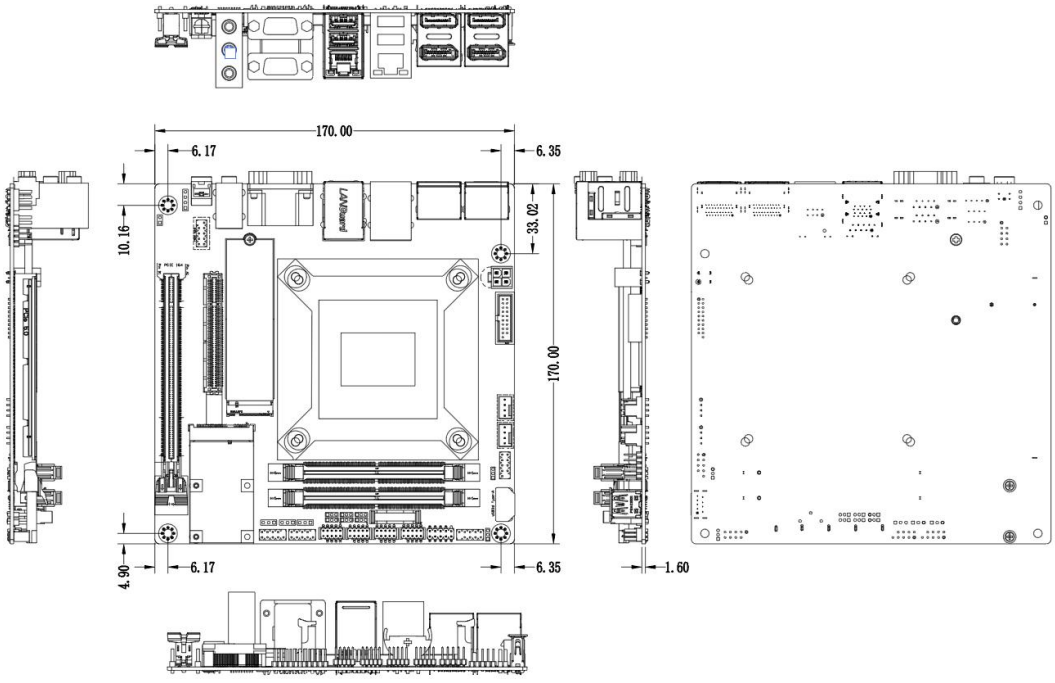

## 2.2 Interface Definition

### 2.2.1 Board Jumper, Header And Interface Diagram

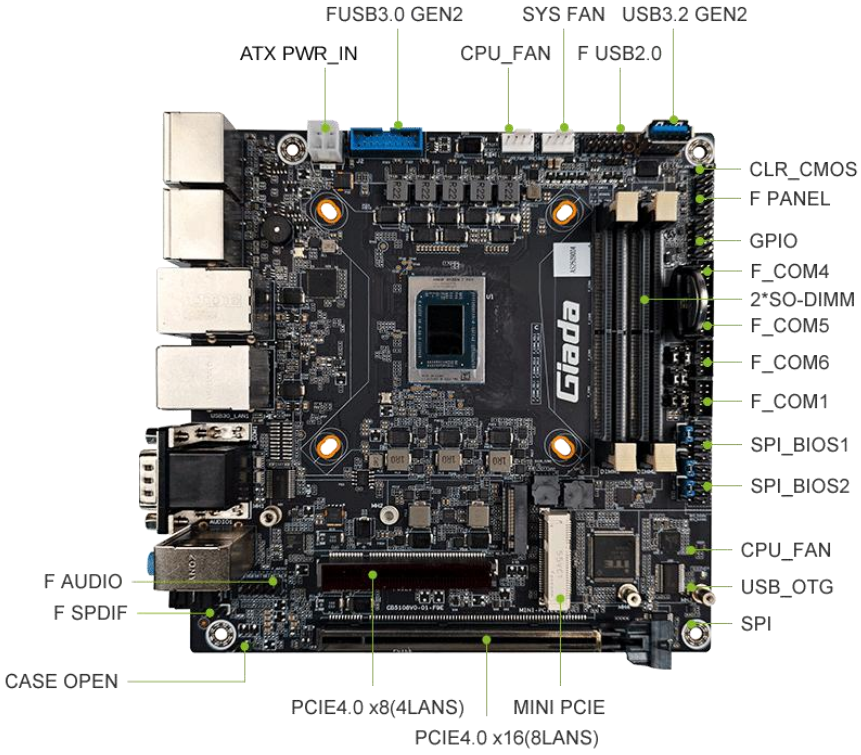


### 2.2.2 Board Jumper And Header Definition

| No. | Designator | Function | Pin Definition |
|---|---|---|---|
| 1 | ATX_12V | Power connector | 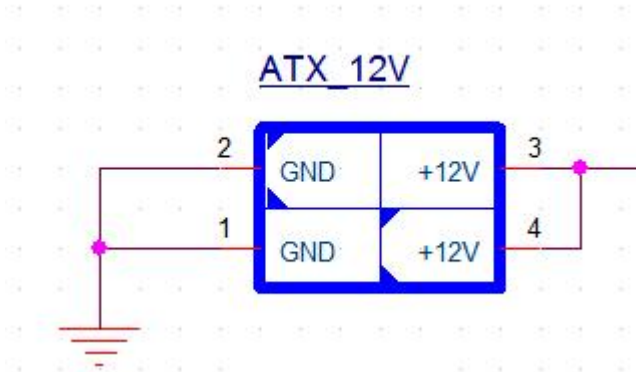  |

| | | | |
|---|---|---|---|
| 2 | J3 | On-board USB 2.0 header | 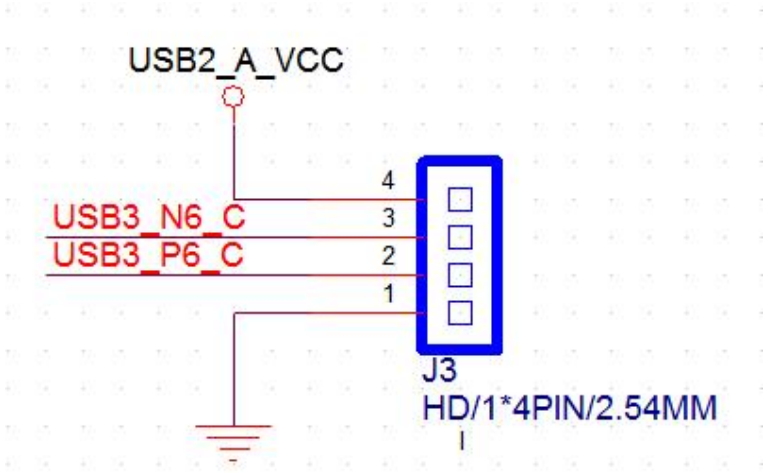 |
| 3 | J2 | On-board USB 3.2 GEN2 header | 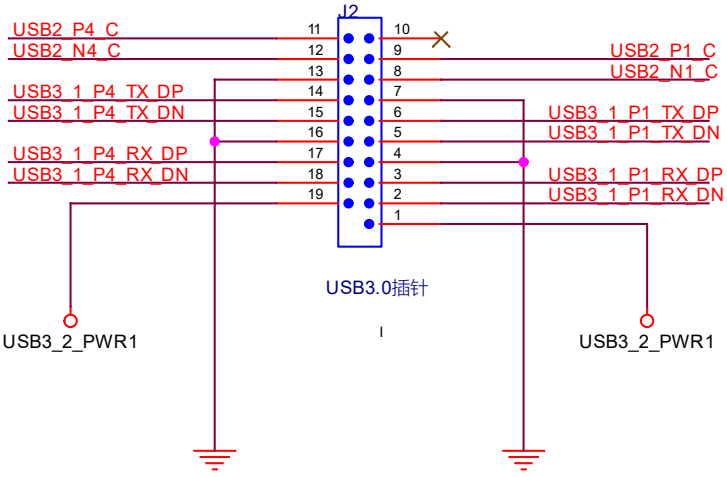 |
| 4 | CPU_FAN1 | CPU fan header | PIN1:GND<br>PIN2:12V<br>PIN3:FAN_TAC<br>PIN4:FAN_CTL |
| 5. | SYS_FAN1 | System fan header | PIN1:GND<br>PIN2:12V<br>PIN3:FAN_TAC<br>PIN4:FAN_CTL |

| | | | |
|---|---|---|---|
| 6 | USB30_1 | On-board vertical Type-A USB 3.2 GEN2 connector | 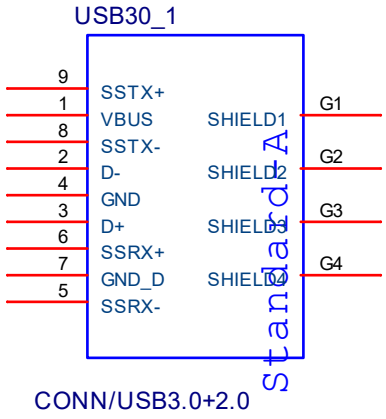 |
| 7 | CLR_CMOS1 | Clear CMOS jumper cap | * **CLR_CMOS1**<br>1-2 NORMAL<br>2-3 CLEAR CMOS |
| 8 | FRONT PANEL HEADER | Front panel header | 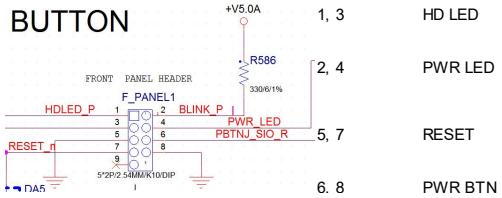 |
| 9 | GPIO1 | GPIO header | PIN1:3.3V<br>PIN2:GND<br>PIN3:GP_OUT(5V)<br>PIN4:GP_IN(3.3V/5V)<br>PIN5:GP_OUT(5V)<br>PIN6:GP_IN(3.3V/5V)<br>PIN7:GP_OUT(3.3V)<br>PIN8:GP_IN(3.3V)<br>PIN9:GP_OUT(3.3V)<br>PIN10:GP_IN(3.3V) |
| 10 | F_COM4 | On-board COM header (RS232/RS485/RS422/ccTalk) | 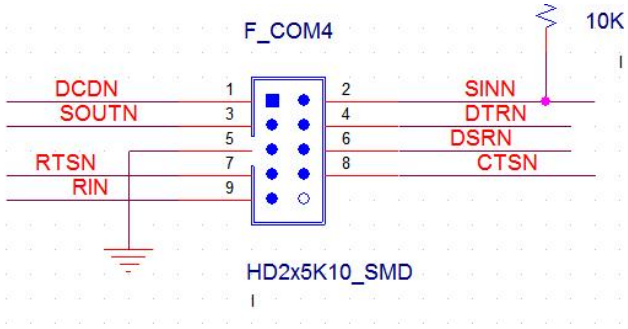 <br>(ccTalk function is on pin 2) |

| | | | |
|---|---|---|---|
| 11 | F_COM5 | On-board COM header (RS232) | 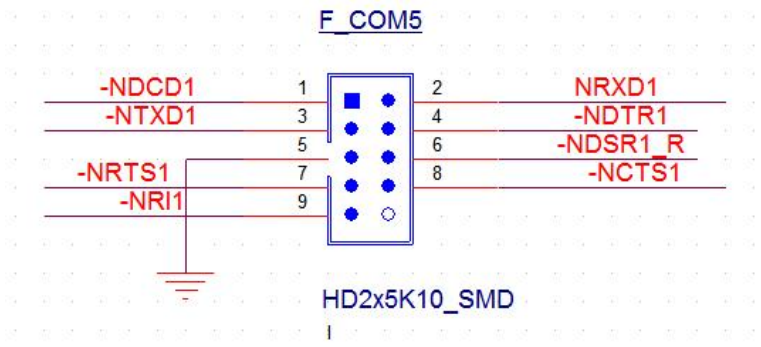 |
| 12 | F_COM6 | On-board COM header (RS232/TTL) | 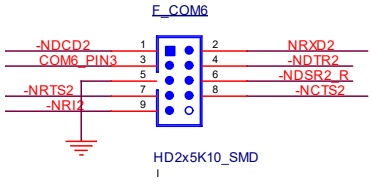 |
| 13 | F_COM6_SEL1, F_COM6_SEL2 | F_COM6 function select jumper | * **F_COM6_SEL1 & F_COM6_SEL2**<br>1-2 RS232<br>2-3 TTL |
| 14 | F_COM1 | On-board COM header (RS232/RS485/RS422/ccTalk) | 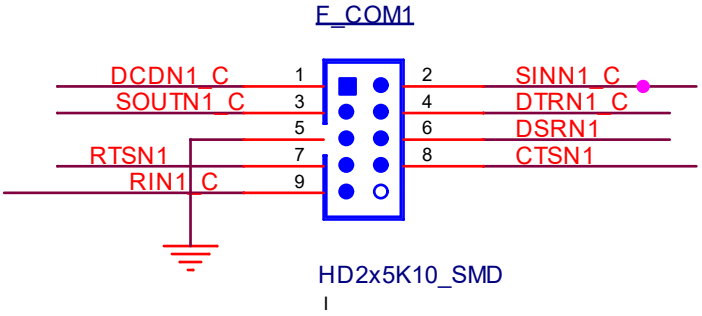 <br>(ccTalk function is on pin 2) |
| 15 | JSPI1 | Dual BIOS select | PIN JSPI1<br>1-2 BIOS1<br>2-3 BIOS2 |
| 16 | JSPI2 | BIOS1 SPI ROM Write Protect jumper | PIN JSPI2<br>1-2 NORMAL<br>2-3 SPI ROM1 Write Protect |
| 17 | JSPI3 | BIOS2 SPI ROM Write Protect jumper | PIN JSPI3<br>1-2 NORMAL<br>2-3 SPI ROM2 Write Protect |

| | | | |
|---|---|---|---|
| 18 | SPI_BIOS2 | SPI header (reserved) | 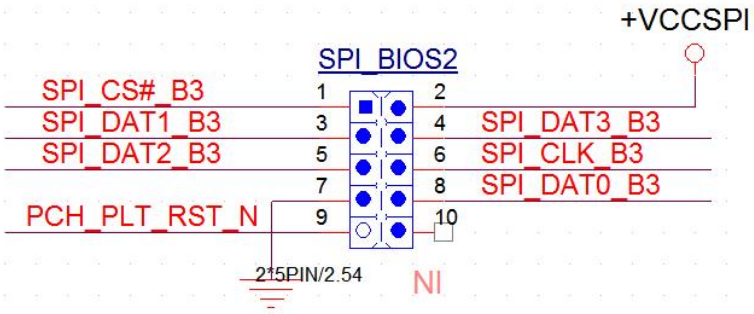 <br>(+VCCSPI at 1.8V) |
| 19 | F_AUDIO1 | Front panel audio header | PIN1:MIC_L<br>PIN2:GND<br>PIN3:MIC_R<br>PIN4:NC(reserved 3.3V, not populated by default)<br>PIN5:line_R<br>PIN6:MIC_JD<br>PIN7:GND<br>PIN8:NC<br>PIN9:line_L<br>PIN10:line_JD |
| 20 | SPDIF2 | SPDIF header | 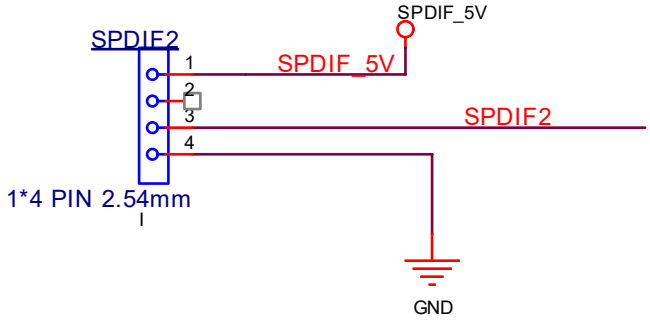 |
| 21 | CASEOPEN1 | CASEOPEN header | **CASE OPEN**<br>1-2 CLOSED: CHASSIS COVER IS CLOSED<br>1-2 OPEN: CHASSIS COVER IS REMOVED |
| 22 | PCIE1 | X8 PCIe slot | GEN4 X4 signal, standard pin definition |
| 23 | PCIE2 | X16 PCIe slot | GEN4 X8 signal, standard pin definition |

| | | | |
|---|---|---|---|
| 24 | M2_SLOT1 | M.2 KEY-M slot | PCIE GEN4 X4 signal, standard pin definition |
| 25 | MINI-PCIE1 | M.2 KEY-E slot | PCIE GEN4 X1 + USB2.0 signal, standard pin definition |
| 26 | eSPI | Reserved debug header (not populated by default) | 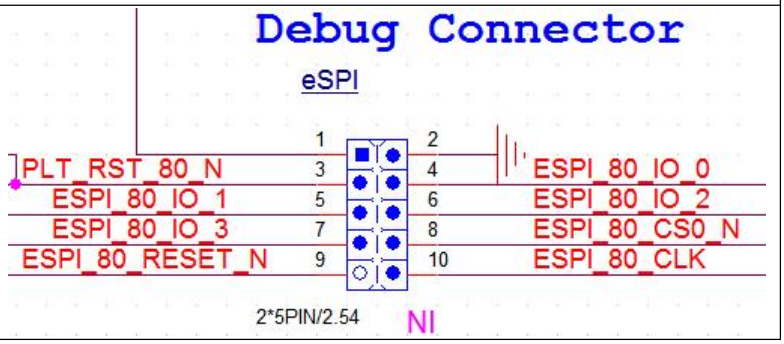 |

## 3. Accessories Installation Steps

⚠ For safety reasons, please ensure that the board is disconnected with power before installation.

### 3.1 Memory Installation

⚠ This product only supports SO-DIMM DDR5-5600 MHZ ECC/Non- ECC(Vertical).

1. Gently push outward the plastic latches on both sides of the SODIMM slot
2. Align and insert the module at 90- degree angle

3. Push vertically down on the top edge of the memory module. Both side latches will snap inward automatically and engage into the notches on the module.

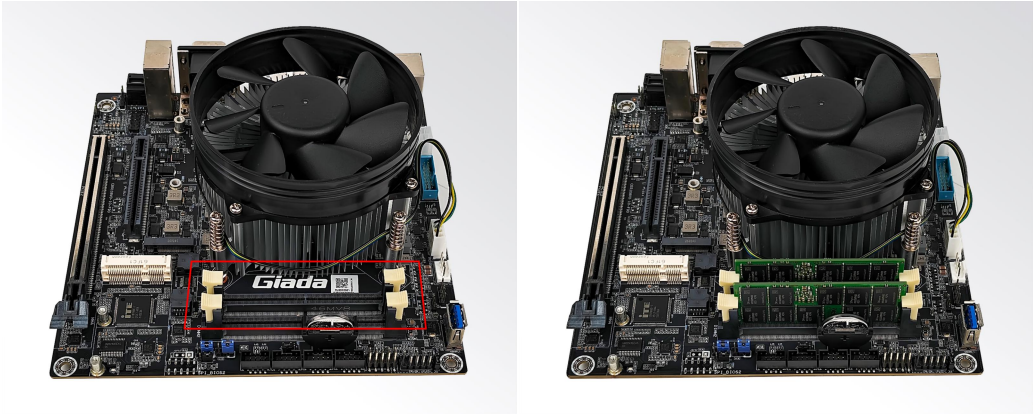

## 3.2 SSD (M.2) Installation

1. Plug the M-Key M.2 (2280) SSD (PCIe protocol) into the appropriate slot.
2. Secure the module to the carrier by tightening up the screw.

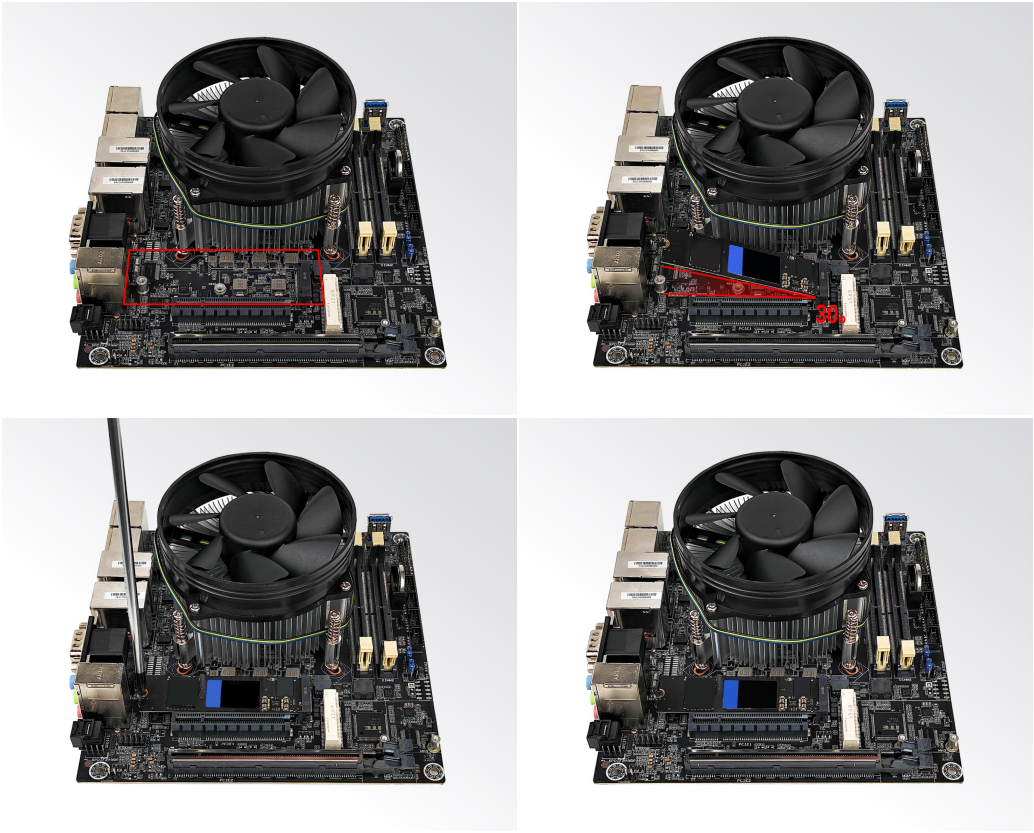

## 3.3 WIFI (PCIE) Installation

1. Align and insert the PCIE WIFI module at 90- degree angle
2. Push vertically down on the top edge of the WIFI module. Both side latches will snap inward automatically and engage into the notches on the module.

## 3.4 GPU Installation

1. Gently push outward the plastic latches on the right side of the PCIE slot
2. Align and insert the GPU module at 90- degree angle
3. Push vertically down on the top edge of the GPU module.Lock the latches.

# 4.Bios Setup

## Notice:

The descriptions relating to BIOS setup in this Manual is for reference only since the BIOS version of the product might be upgraded. Giada provides no guarantee that all the contents in this Manual are consistent with the information you acquired.
BIOS is a basic I/O control program saved in the Flash Memory. Bridging the motherboard and the operation system, BIOS is used for managing the setup of the related parameters between them.
When the computer is activated, the system is first controlled by the BIOS program. Firstly, a self-detection called POST is performed to check all hard devices and confirm the parameters of the synchronous hardware.
Once all detections are completed, BIOS will hand over the controlling to the operation system (OS). As BIOS serves as the only channel that connects the hardware and software, whether your computer can run stably and work in optimized state will hinge on how to properly set the parameters in BIOS. Therefore, the correct setup of BIOS plays a key role in stably running the system and optimizing its performance.
The CMOS Setup will save the set parameters in the built-in CMOS SRAM on the motherboard. When the power is shut off, the lithium battery on the motherboard will provide continuously power to CMOS SRAM.

**The BIOS setup program will allow you to configure the following items:**

1. HD drive and peripheral devices
2. Video display type and display items
3. Password protection
4. Power management characteristics

### A. State of BIOS Setup

When the computer is started up, BIOS will run the self-detection (Post) program. This program includes series of diagnosis fixed in BIOS. When this program is executed, the following information will appear if any error is found:
Press [F1] to Run General help
Press [F2] to Load previous values and continue

To enter BIOS, you can press DEL; to load the default values and enter the system, you can press DEL to enter the BIOS interface if error occurs. If the indicative information disappears before operating, you can shut down the computer and turn it on again, or you can press the RESET key

on the product case. To restart your computer, you can also press < Ctrl > + < Alt > + < Delete > simultaneously.

**B. Function Keys definitions**

| Hot Key | Description |
|---|---|
| ↑ | (Up key) Move to the previous item |
| ↓ | (Down key) Move to the next item |
| ← | (Left key) Move to the left item |
| → | (Right key) Move to the right item |
| ESC | Exit the current interface |
| Page Up | Change the setup state, or add the values |
| Page Down | Change the setup state, or deduct the values |
| F1 | Display the information of the current function Keys definitions. |
| F9 | Load the optimized values |
| F10 | Save the settings and exit the CMOS SETUP |

**C. Auxiliary information Main interface**

When the system enters the main interface of Setup, the major selected contents will be displayed at the lower part of the interface with the change of the options.

When you set the value for each column, you can view the preset value of the column and the values that can be set if you press F2, for example, the BIOS default values or CMOS Setup values.
To exit the interface for auxiliary information, press [ESC].

1) Main menu
When the system enters the CMOS Setup menu, you can see the main menu on the upper part of the screen, as shown in Figure1.
In this main menu, you can use the left and right direction keys to select the setup items. Once the item is selected, the lower part of the computer screen will show the details of setting.

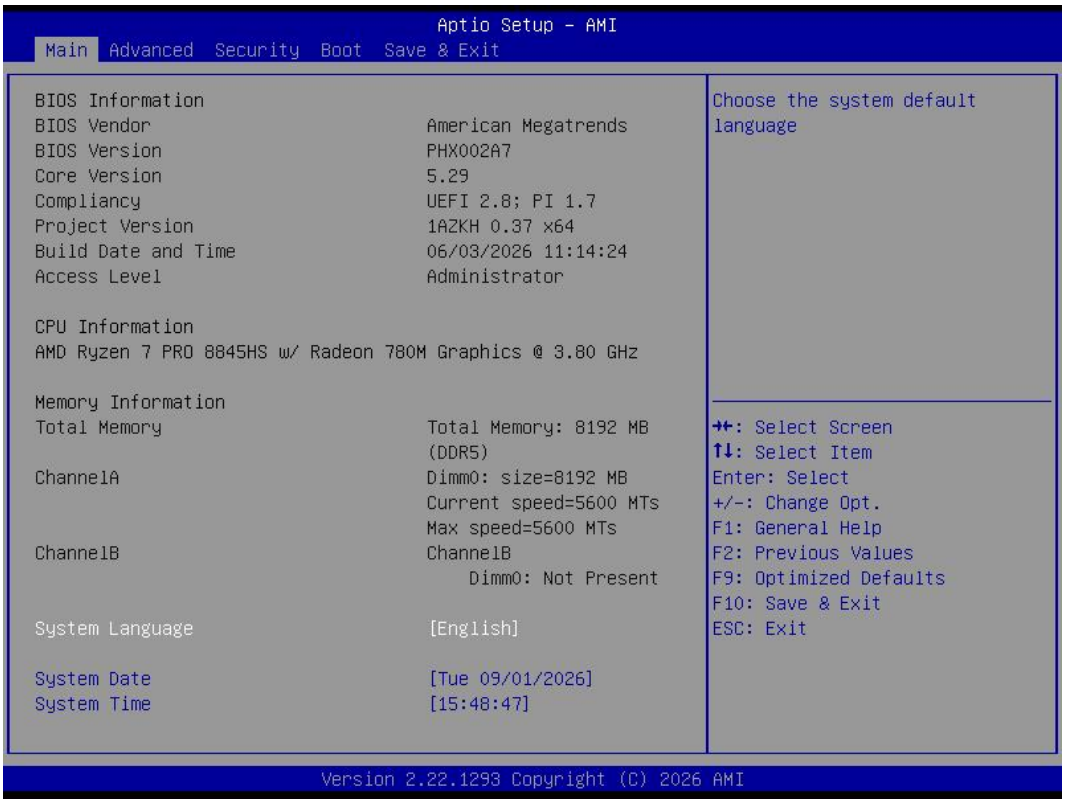


Fig 1

2) Main (standard CMOS setup)
This item is used for setting the date and time.

3) Advanced (advanced BIOS setup)
This item is used for setting the advanced functions provided by BIOS, such as specifications of PCIe facilities, CPU, HDD, etc.

4) Security (set the administrator/user password)

5) Boot (startup configuration characteristics)

6) Save & Exit (option of exit)
This item includes load optimal defaults / load failsafe defaults value / discard changes / discard changes and exit.

## 4.1 Main (Standard CMOS setting)

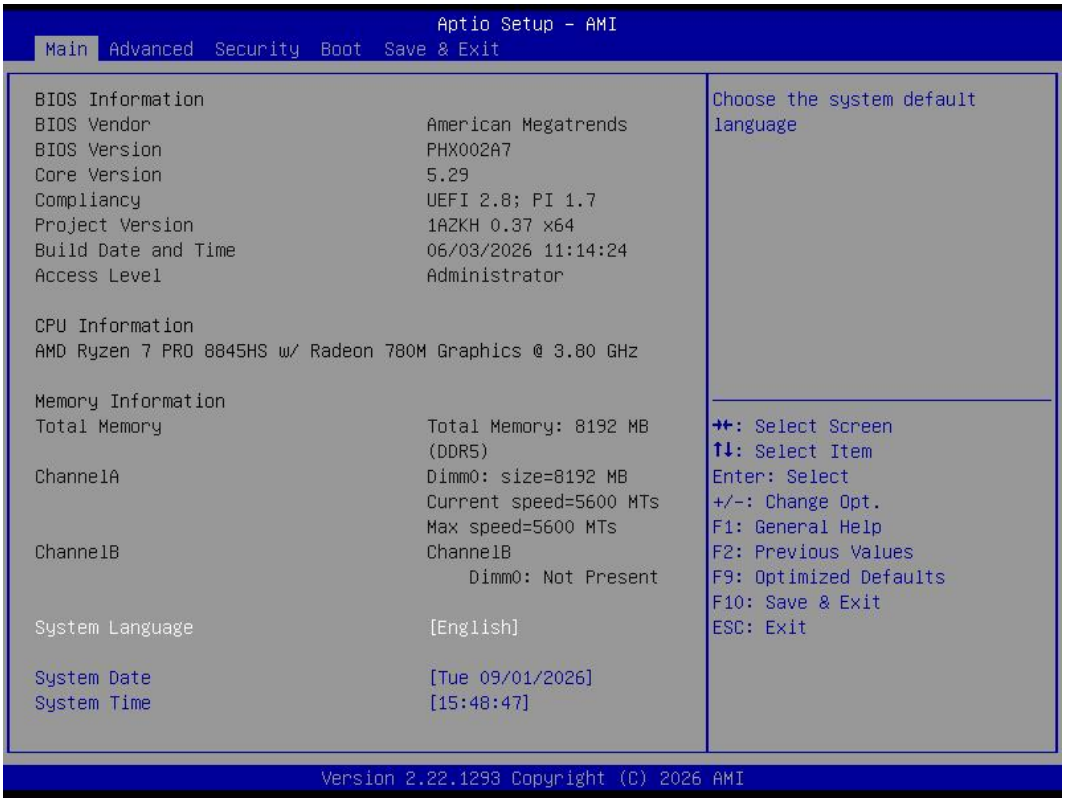


1) System time (hh:mm:ss)
Use this item to set the time for the computer, with the format as “HH / MM / SS”.

2) System date (mm:dd:yy)
Use this item to set the date for the computer, with the format as “week, MM / DD / YY”.

## 4.2 Advanced (Advanced BIOS setup)

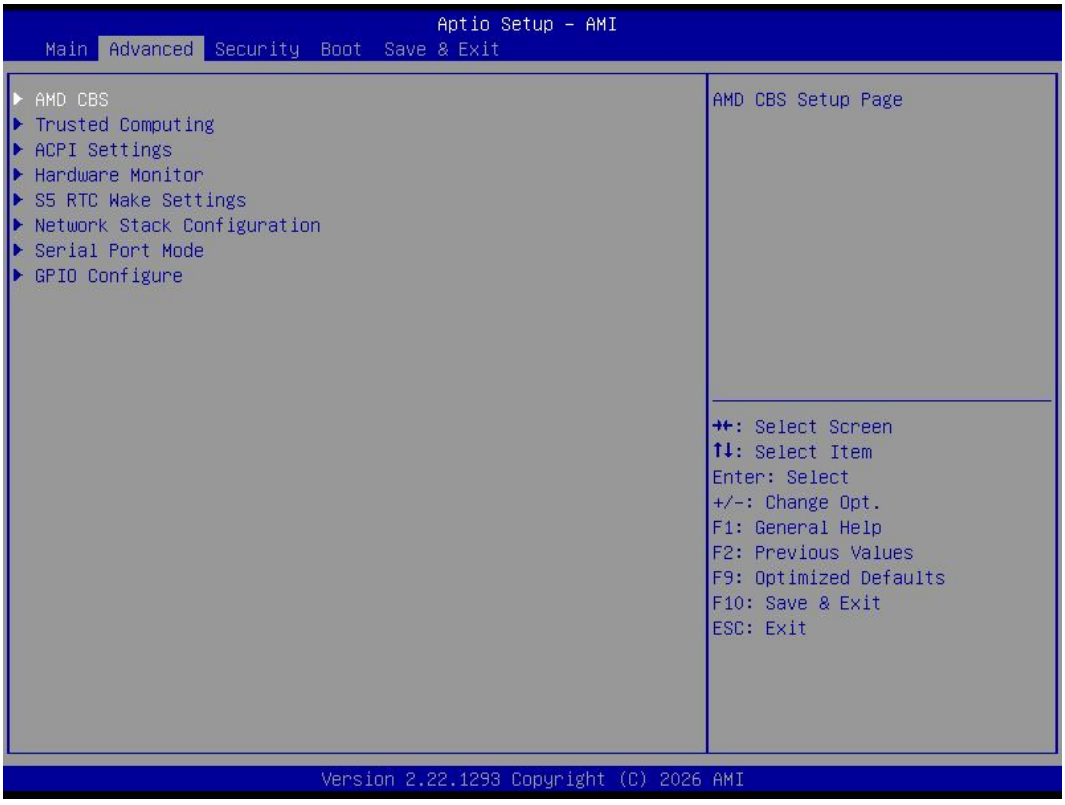


### 4.2.1 AMD CBS Setting

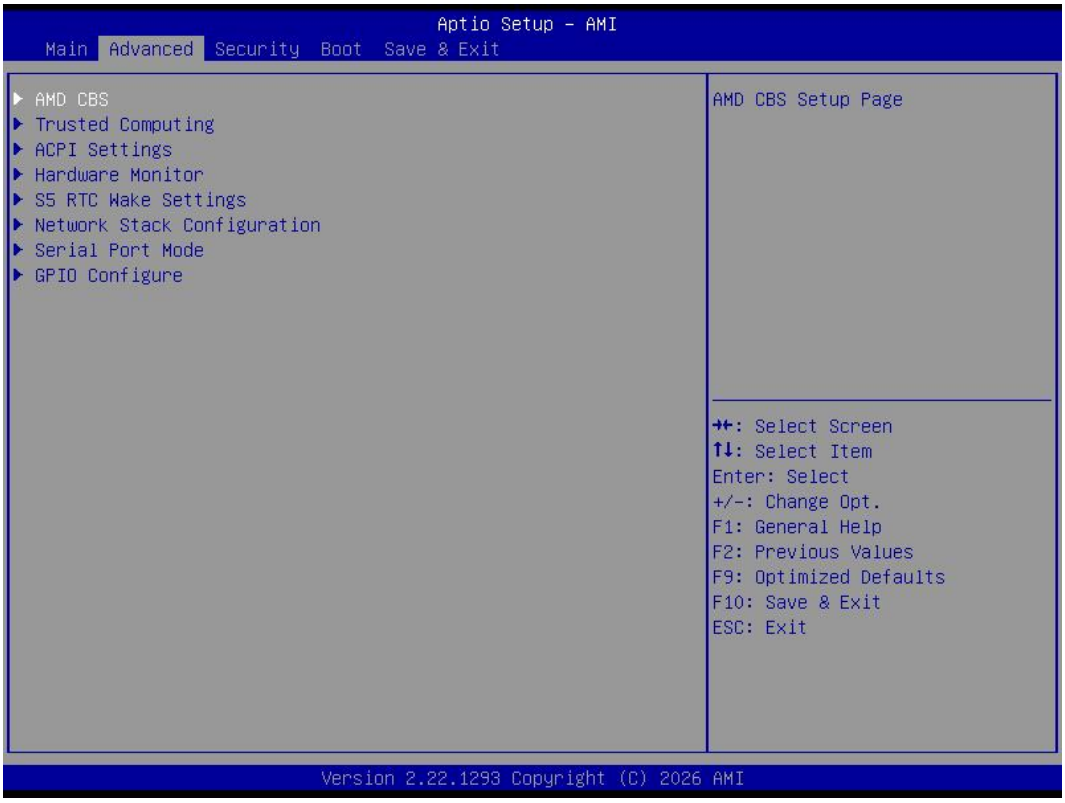

| AMD CBS Option | Description |
|---|---|
| **JAHC Control** | Hide and show BIOS options |
| **I3C/I2C Configuration** | ● I3C/I2C Configuration Option |
| **USB Configuration Option** | ● I3C/I2C Configuration |
| **AC Power Loss Option** | ● AC Power Loss means after restore power supply.<br>● Allways Off (Default): If set it as allways off, it means the system will remain shutdown state<br>● Allways On: If set it as allways on, it means the system will be power on automatically.<br>Previous: If set it as Previous, it means the system will keep State of last setup. |

### 4.2.2 Trusted Computing

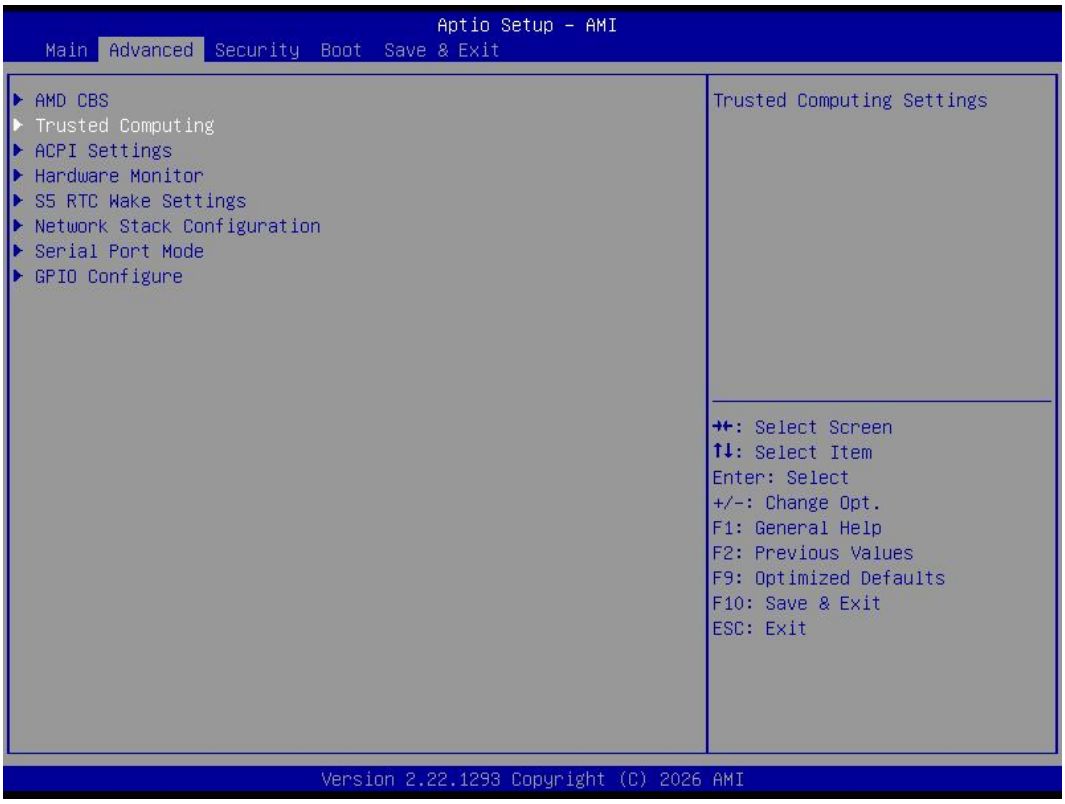


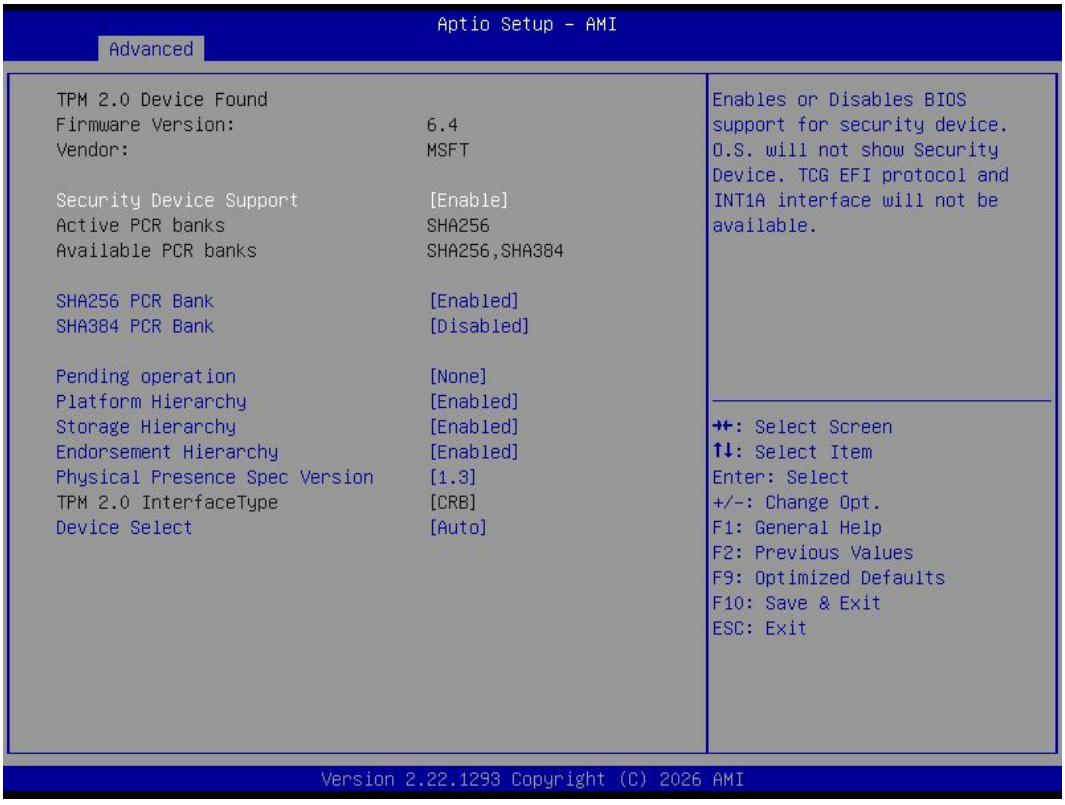

| Options | Description |
|---|---|
| **Trusted Computing** | |
| **TPM20 Device Found**<br>**Firmware Version:**<br>**Vendor:** | It shows the information of TPM device. |
| **SHA256 PCR Bank** | Disable or Enable the SHA256 PCR Bank. The option is enabled by default. |
| **SHA384 PCR Bank** | Disable or Enable the SHA348 PCR Bank. The option is enabled by default. |
| **Pending operation** | It includes None and TPM Clear function. |
| **Platform Hierarchy** | Disable or Enable the Platform Hierarchy. |
| **Storage Hierarchy** | Disable or Enable the Storage Hierarchy. |
| **Endorsement Hierarchy** | Disable or Enable the Endorsement Hierarchy. |
| **Physical Presence Spec Version** | You can choose 1.2 or 1.3. The version is 1.3 by default. |
| **TPM 20 Interface Type** | TPM2.0 Interface Type is CRB by default. |
| **Device Select** | You can select TPM1.2 or TPM2.0 or Auto. Auto is set up by default. |

### 4.2.3 ACPI Settings

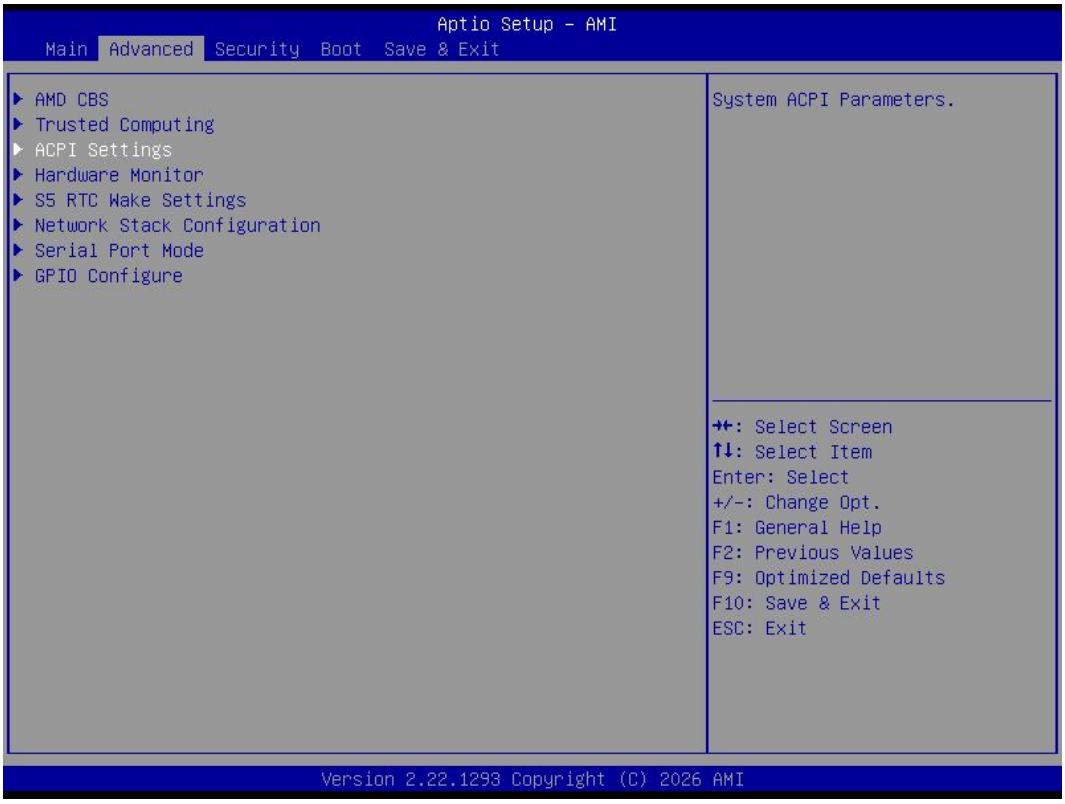


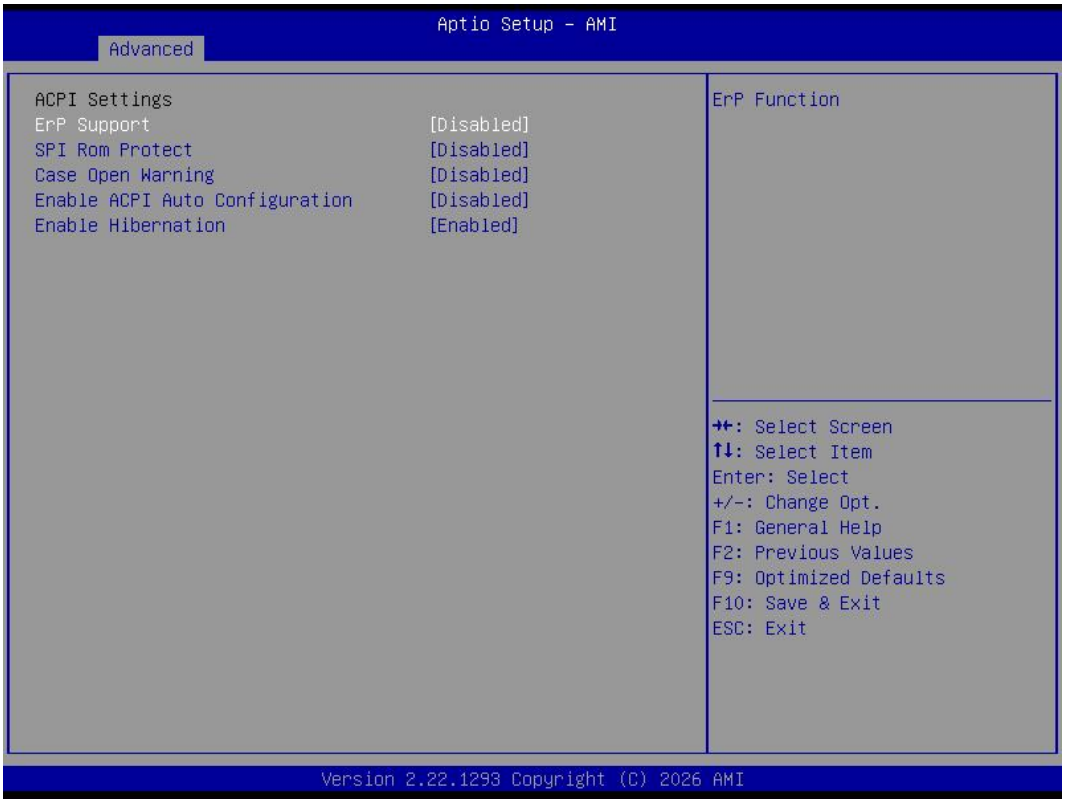

| The ACPI Options | Description |
|---|---|
| **The ACPI Settings** | |
| **Enable ACPI Auto Configuration** | Enable or Disable BIOS ACPI AUTO Configuration |
| **Enable Hibernation** | **Enable or Disabled Hibernation** |
| **ErP Function** | ● Enables or Disables ErP |

### 4.2.4 Hardware Monitor

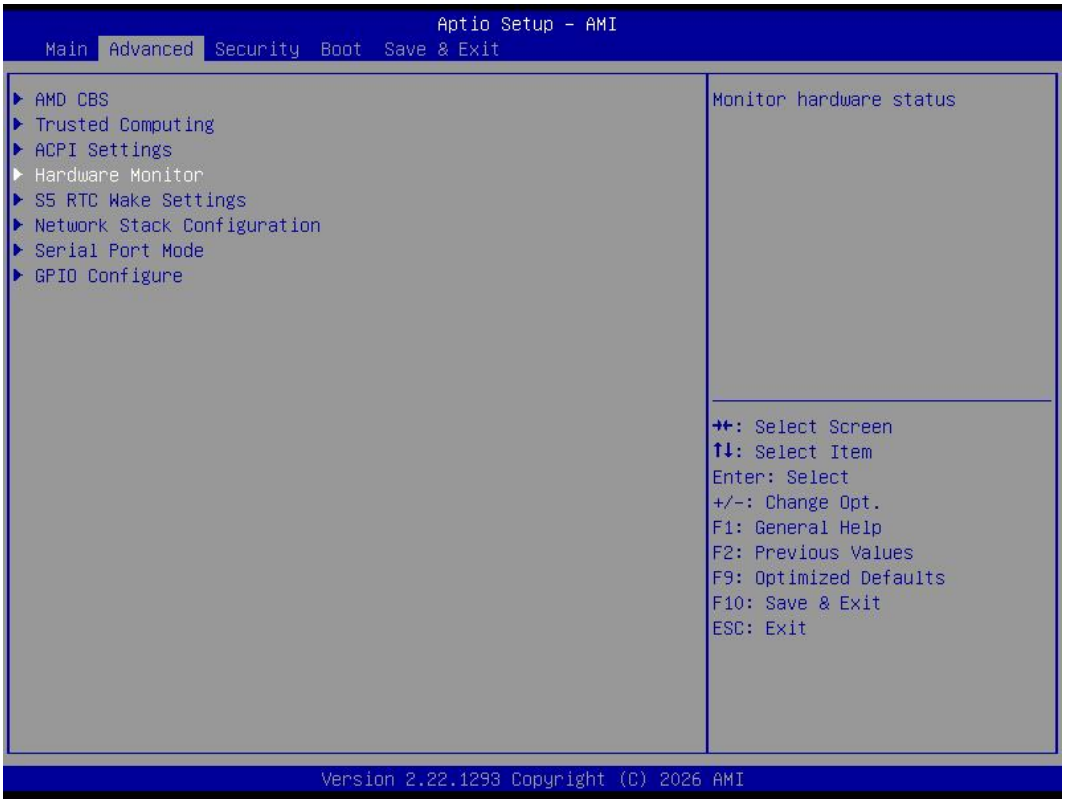

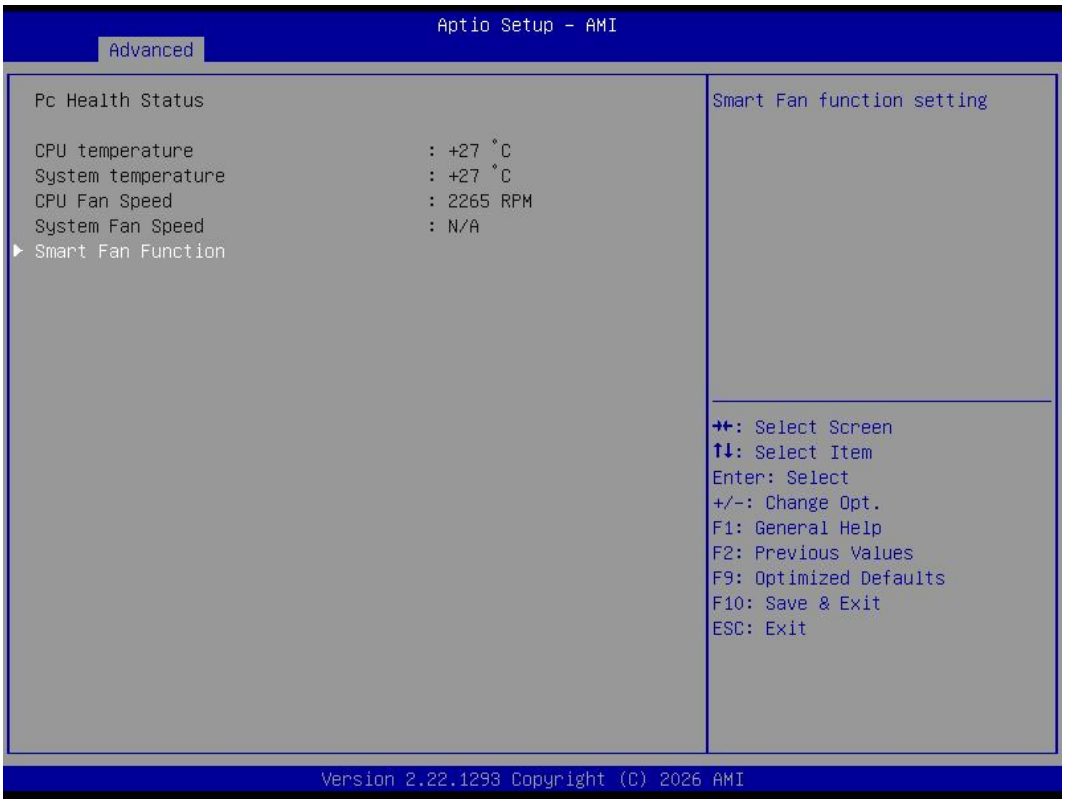


| Pc Health Menu | Description |
|---|---|
| **Pc Health Status** | |
| **Fan off temperature limit** | ● FAN will stop work If temperature is lower than the Fan off temperature limit value. |
| **Fan start temperature limit** | ● If the temperature is higher than fan off temperature limit, FAN will start work. |
| **Fan Full Speed Temp limit** | ● If the temperature is higher than the FAN Full Speed temp limit value, the FAN will work at full speed. |
| **Fan start PWM** | ● If the temperature is higher than the FAN start PWM value, the FAN will start work. |
| **PWM slope setting** | ● 0.125 PWM<br>● 0.25 PWM<br>● 0.5 PWM<br>● 1 PWM<br>● 2 PWM<br>● 4 PWM<br>● 8 PWM<br>● 15.875 PWM |

### 4.2.5 S5 RTC Wake Settings

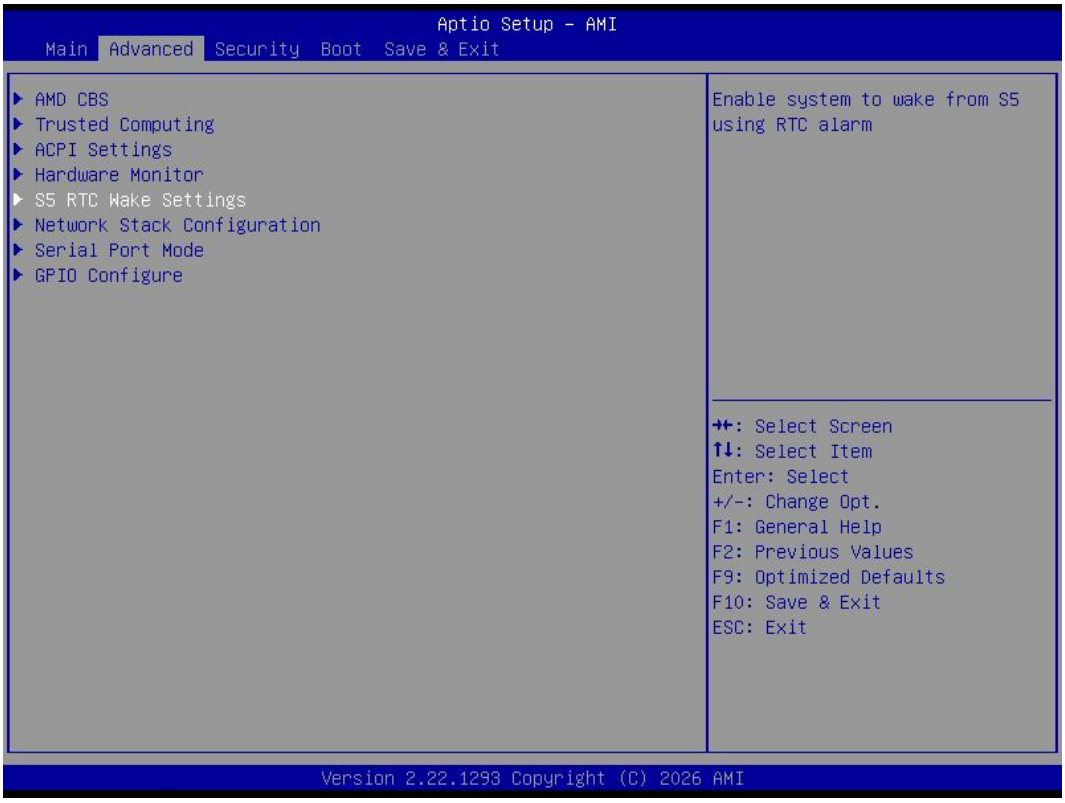


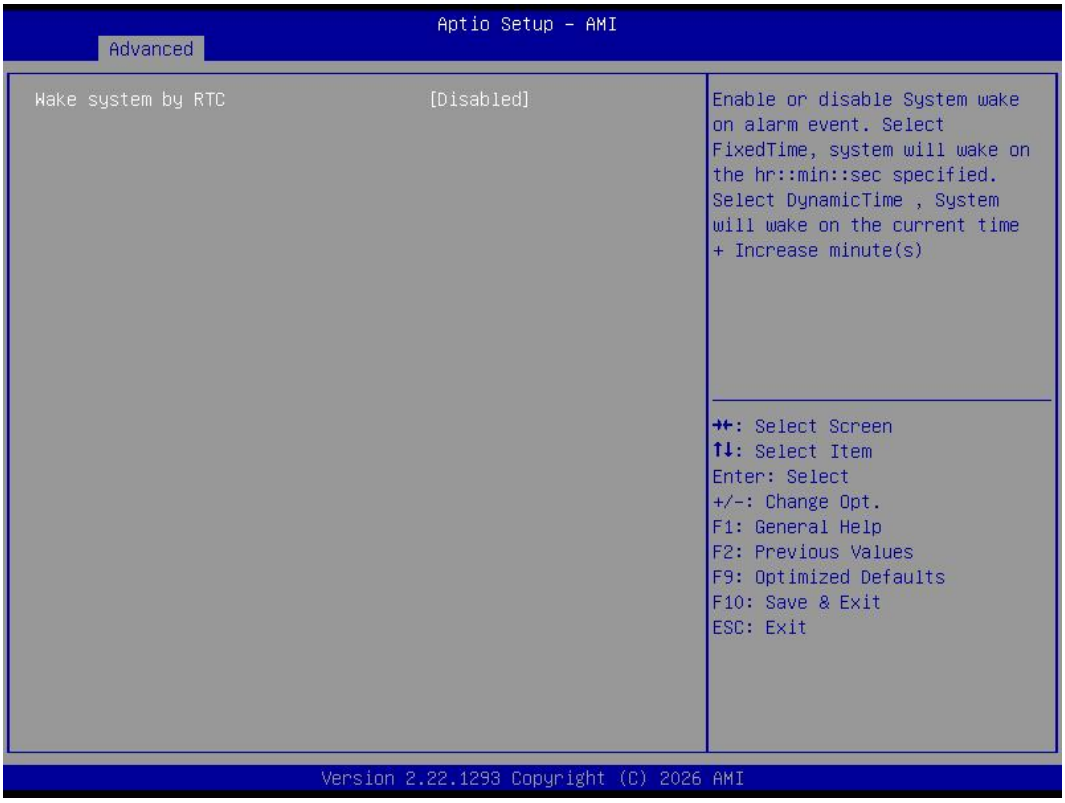

| S5 RTC Wake Settings | Description |
|---|---|
| **Wake System by RTC** | ● Enable or disable System wake on alarm event. Select FixedTime, system will wake on the hr::min::sec specified.Select DynamicTime,System will wake on the current time + Increase minute(s). |

### 4.2.6 The Network Stack Configuration

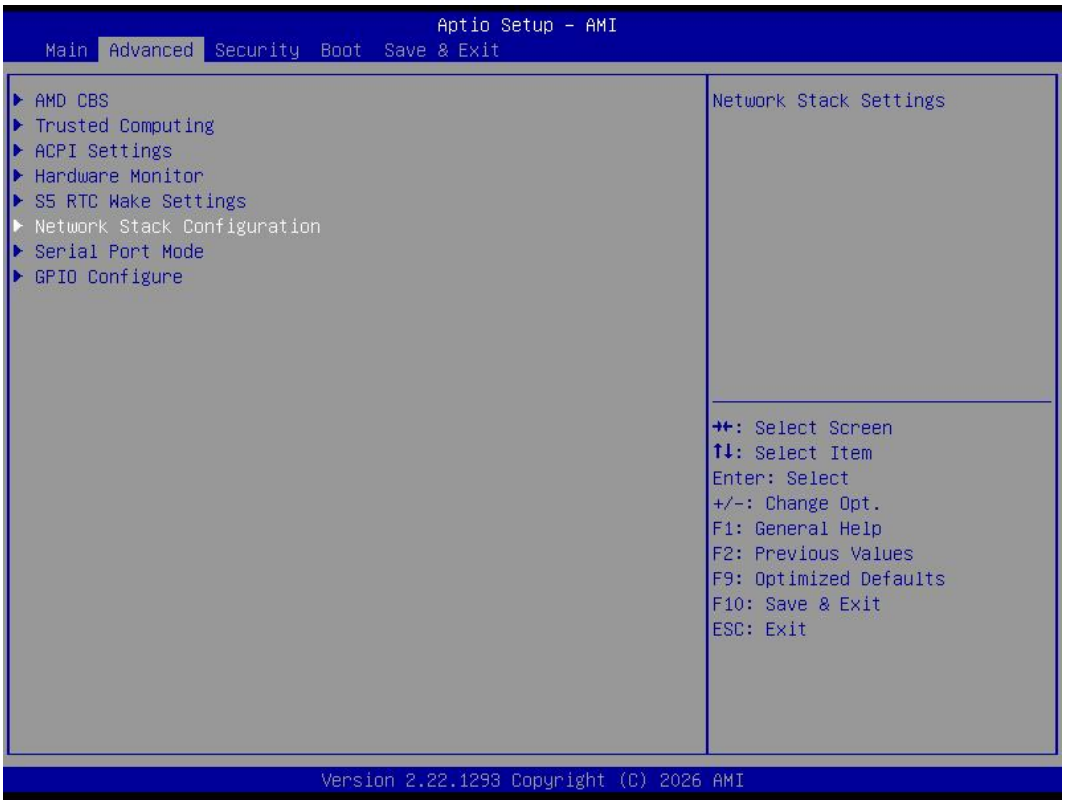

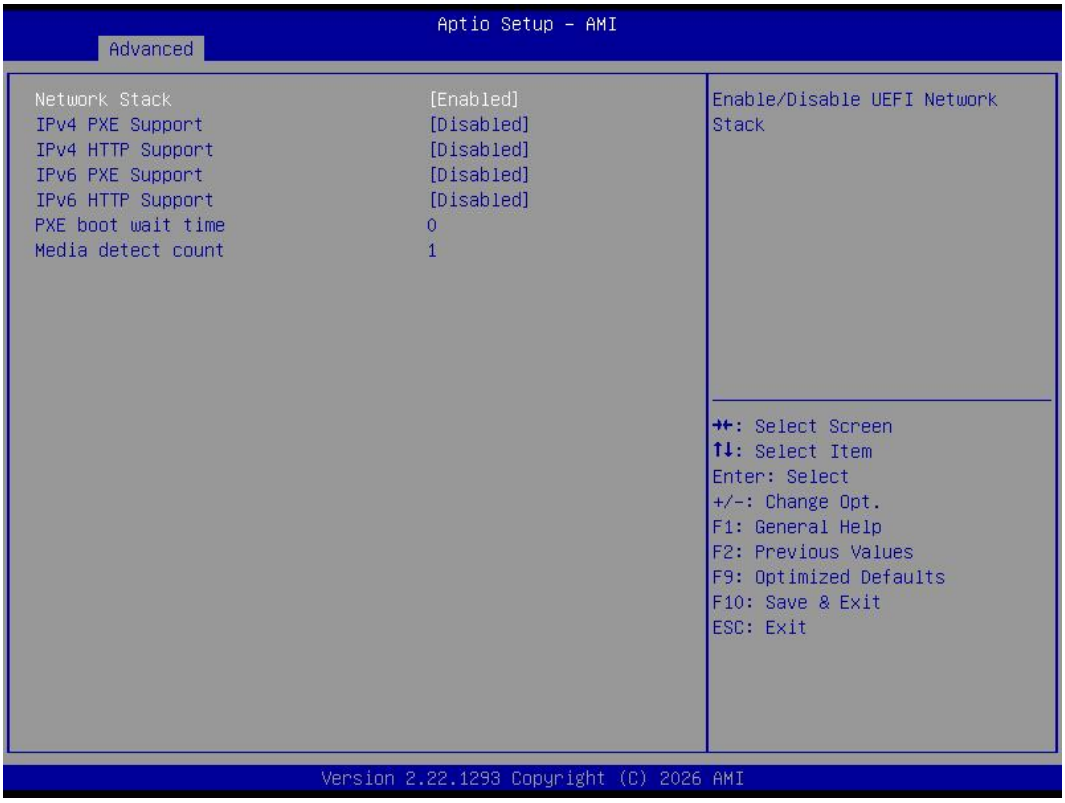


| The Network Stack | Description |
|---|---|
| **Pc Health Status** | |
| **Network Stack** | The Network Stack is disabled by default.PXE Network Boot option. Enabling this option will support PXE network boot.<br>● Enabled<br>● Disabled. |

### 4.2.7 Serial Port Mode

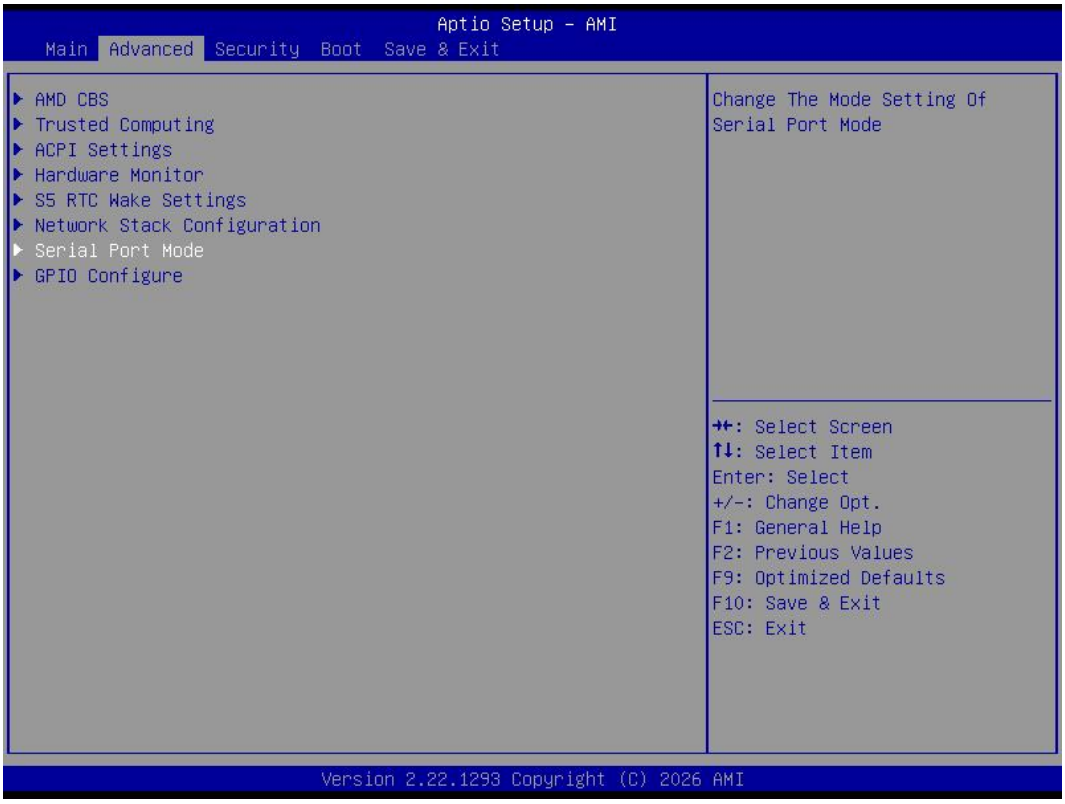


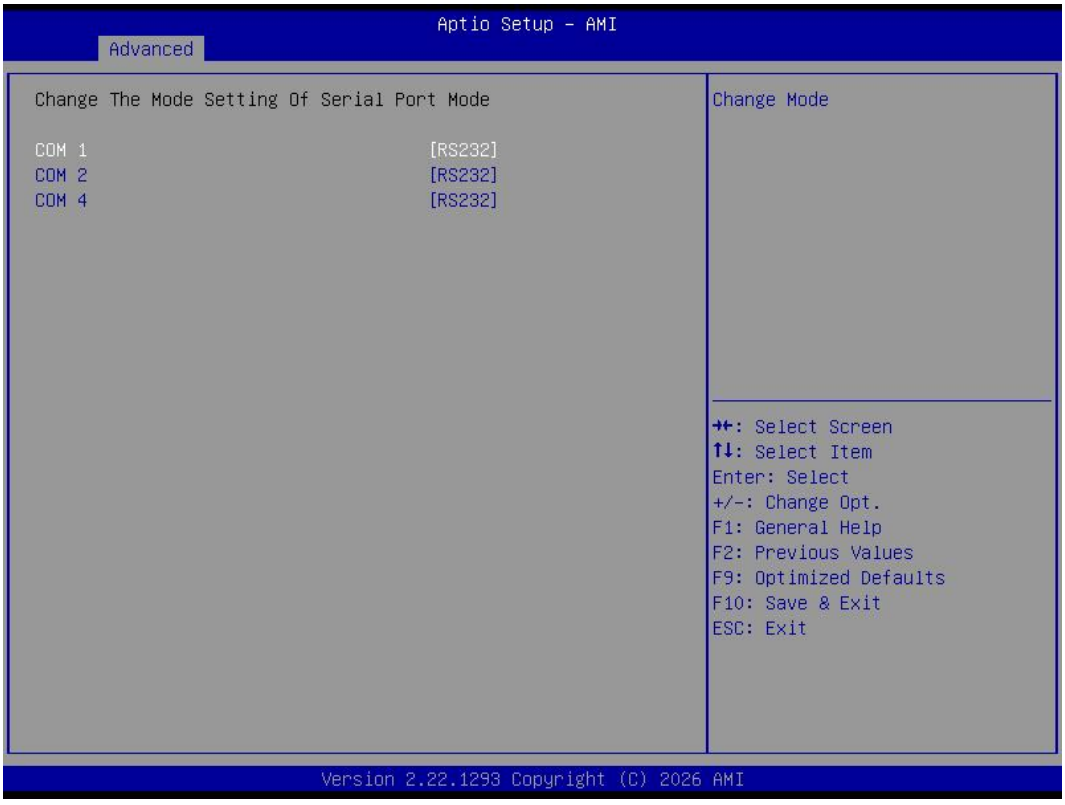

| Menu | Description |
|---|---|
| **Com 1/2/3** | ● Users can set the COM port working mode according to the actual application scenario. |

### 4.2.8 GPIO Configure

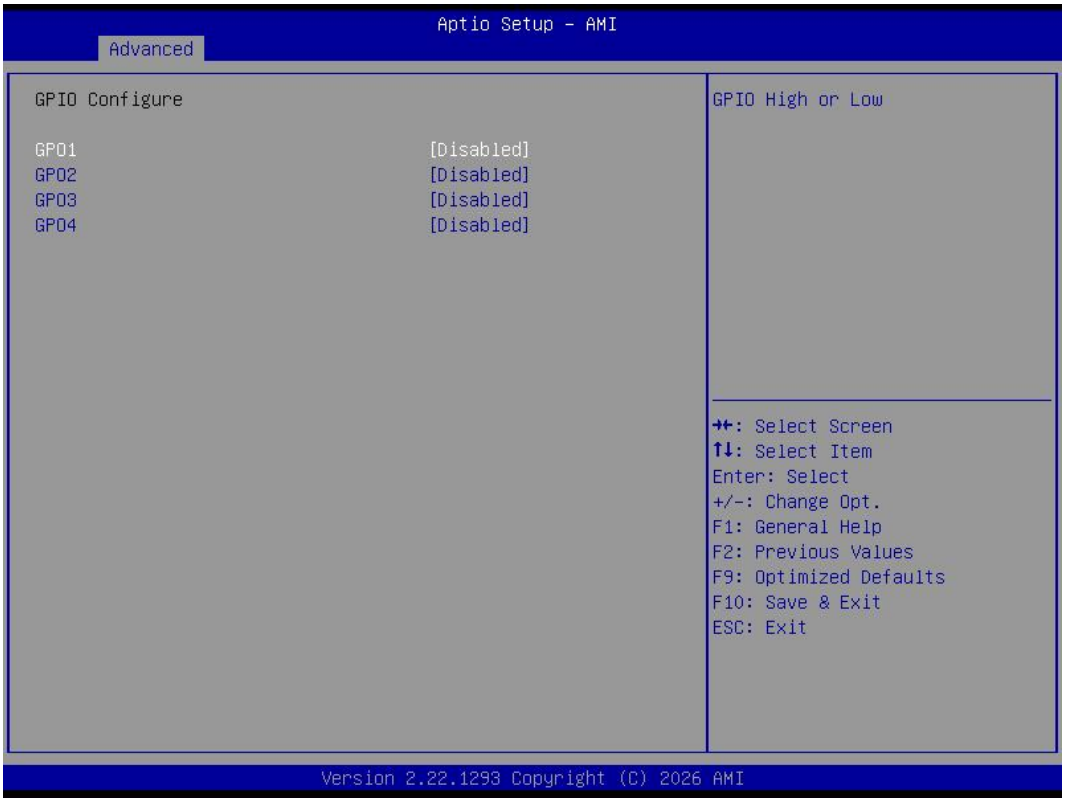


| Menu | Description |
|---|---|
| **GPO 1/2/3/4** | ● Users can enable t the GPO port working mode according to the actual application scenario. |

## 4.3 Security (set the administrator/user password)

If this function is selected, the following information will appear:
Enter New Password hhhhhh
Then enter a password which is no more than eight characters and press <Enter>. BIOS will require to enter the password again.
Once you enter it again, BIOS will save the set password. Once the password item is enabled, you will be required to enter the password every time before the system entering to the setup program of BIOS. The user can set this item through the Security Option in advanced BIOS properties. If the Security Option is set as System, the password will be required to be entered before both the system guides and entering to the setup program of BIOS. If it is set as Setup, the password will be required to be entered only before the system entering to the setup program of BIOS.
To delete the password, press <Enter> in the popped-up window that requires to enter the password. Then information for confirmation will appear on the screen to allow you decide whether the password will be disabled. Once the password is disabled, you can enter the setup program directly without password when the system is restarted.

| The Secure Boot Option | Description |
|---|---|
| **The Secure Boot Option** | |
| **Secure Boot** | This item is use to enable and disabled the secure boot function |
| **Secure Boot Mode** | In Custom mode,users can write new Microsoft certificates through the Restore Factory Keys option. Note: The written Microsoft certificates take effect after a restart. |
| **Restore Factory Keys** | Force System to User Mode,Install factory default Secure Boot Key databases. |
| **Expert Key Management** | Enables expert users to modify Secure Boot Policy variables without variable authentication |

## 4.4 Boot Menu

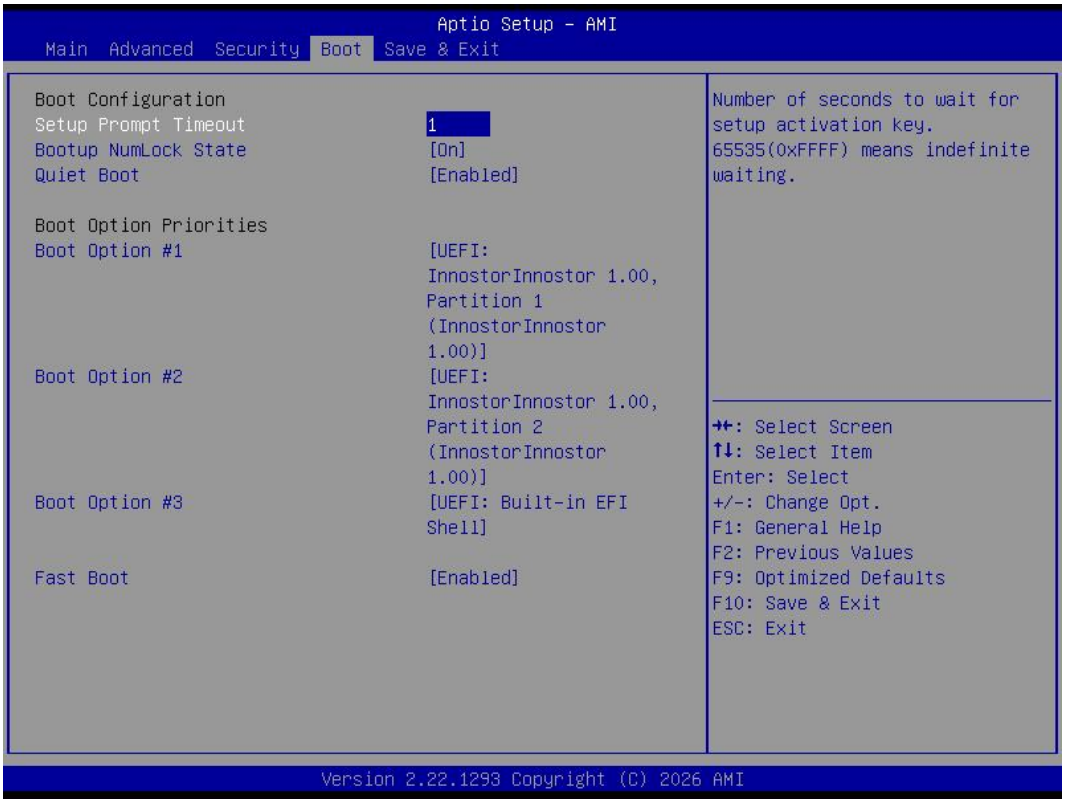

| Boot Item | Description |
|---|---|
| **Boot Configuration** | |
| **Setup Prompt Timeout** | This item is use to set the wait time of entering the operation system. During the BIOS post, if user doesn't press the keyboard, it won't respond unless you reboot the BIOS. The Setup Prompt Timeout is 3s by default. You can set the time as you want. |
| **Bootup NumLock State** | Options are OFF and ON. In other words, this item can be used to set the state of Num Lock after entering the system. It can be set according to user's needs and doesn't affect the performance of the computer. |
| **Quiet Boot** | If this item is set as Enabled, the system can be started within five seconds and some detection items will be ignored. The options are [Disabled] and [Enabled]. |
| **FIXED BOOT ORDER Priorities** | |
| **Boot Option #1** | The first boot device. If BIOS doesn't detect the first boot device, it will check the second boot device. |
| **Boot Option #2** | The second boot device. |
| **Boot Option #3** | The third boot device. |

## 4.5 Save & Exit

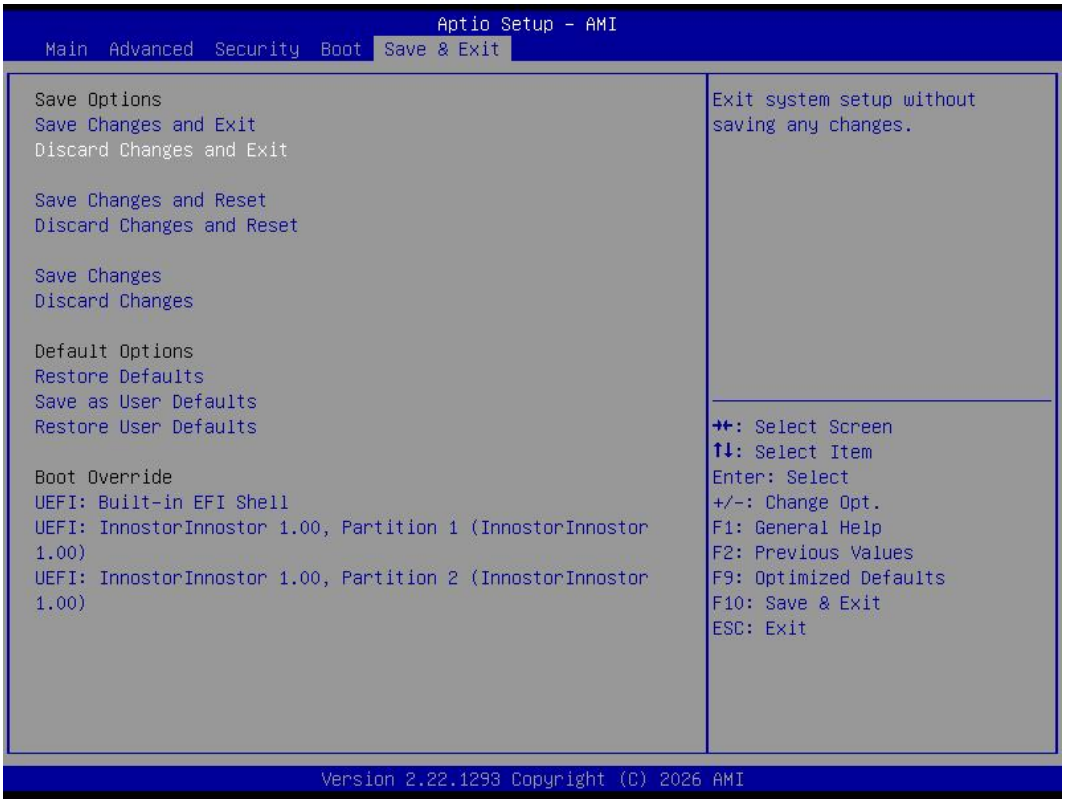


| Save Exit Item | Description |
|---|---|
| **Save Options** | |
| **Save Changes and Exit** | Save all changes and exit |
| **Discard Changes and Exit** | Give up the settings and exit. |
| **Boot Override** | Whole Boot devices |

Shenzhen JIEHE Technology Development Co., Ltd.
Website: www.giadatech.com
Phone: +86-755-3330 0326
Email: support@giadatech.com
Address: 37F, Holdfound Sky Plaza Office Building, 11008
Beihuan Blvd., Nanshan, SZ, China, 518051

The terms HDMI, HDMI High-Definition Multimedia Interface, and the HDMI Logo are trademarks or registered trademarks of HDMI Licensing Administrator, Inc.